YAMAHA

PARTS CATALOGUE

YFM25RX (4D31) U.S.A.
YFM25RX (4D32) CANADA
YFM25RX (4D33) EUROPE
YFM25RX (4D34) OCEANIA
YFM250R (4D34) JAPAN

1G4D3-100E1

(2G4D3-100E1)

YAMAHA GENUINE Parts & Accessories

A2

YFM25RX/YFM250R
PARTS CATALOGUE
©2007 by Yamaha Motor Co., Ltd.
1st edition, June 2007
All rights reserved.
Any reprinting or unauthorized use
without the written permission of
Yamaha Motor Co., Ltd.
is expressly prohibited.

A3

FOREWORD

This Parts Catalogue is related to the parts for the model(s) on the cover page. When you are ordering replacement parts, please refer to this Parts Catalogue and quote both part numbers and part names correctly.

1. Modifications or additions which have been made after the issue of the Parts Catalogue will be announced in the Parts News.
   It is advisable that you make the necessary corrections to the Parts Catalogue according to the Parts News.

2. Abbreviations
   The following abbreviations are used in this Parts Catalogue.

   "UR" Use specified parts number.
   "UN" Use as many as needed.
   "AP" Alternate Parts
   "LM" Locally Made (Parts need to be ordered locally)
   "F#" Frame No. (Applicable machine No.)
   "O/S" Over Size

3. The number of components for assembly
   - Parts, which are to be supplied in an assembly, are listed with a dot (.) in front of the part name as shown below.
   - The numeral appearing to the right of each component part indicates the quantity of parts for each assembly unit.

PART NO.	DESCRIPTION	Q'TY	REMARKS
2F5–83310–60	FRONT FLASHER LIGHT ASSY	2	
115–83311–60	.BULB (6V–18W)	1	

4. Applicable colours of graphics are represented in the "REMARKS" as shown below.

PART NO.	DESCRIPTION	Q'TY	REMARKS
2N4–24110–00–X5	FUEL TANK COMP.	2	MXR
3J1–24240–10	.GRAPHIC, FUEL TANK	1	FOR MXR

5. Note that the illustrations for reference in finding parts numbers are not to be used for assembling. When assembling, please use the applicable service manual.

6. The asterisk (*) before a reference number indicates modified items after the first edition.

7. Applicable Serial No.

Engine Serial No.

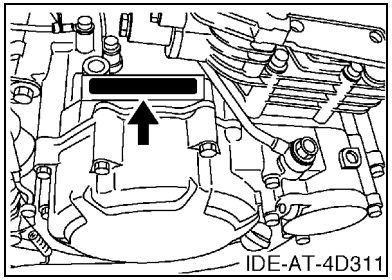

Frame Serial No.

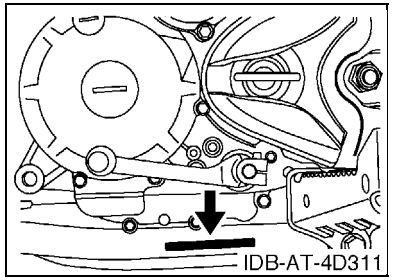

8. Applicable Colour Code (The (*) mark shows Model colour.)

Abbreviation	Colour Name	Colour Code
DPBSE(*)	DEEP PURPLISH BLUE SOLID E	0583
HPB	BLACK (FOR ELECTRODEPOSIT)	00R4
PGD(*)	PASTEL DARK GRAY	003E
S8	SILVER 8	0895
SL	SILVER	0035
VRC7	VIVID RED COCKTAIL 7	0580
WW	WHITE	0036

9. Quantity Column Information

Column No.	Name Of Q’ty Column	Destination
1	USA	U.S.A.
2	CAN	CANADA
3	EUR	EUROPE
4	OCE	OCEANIA
5	JPN	JAPAN

MODEL LABEL

(1) A label called “Model Label” is affixed in the location as indicated in (3) below. When using this parts catalogue, please be sure to cross–reference the “model code – production code No.” in the catalogue with the “model code – production code No.” indicated on the Model Label affixed onto the product concerned.

(2) “Model Label” Indication

a b ○ xxxx – xxx ● x c	a: Model Type Code b: Production Code No. c: Colouring Type

○ 4TW1–010 ● A

(3) Model Label Affixing Location

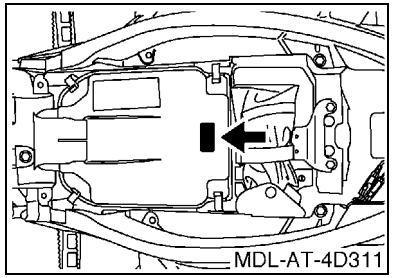

(4) Colouring Information

Model Code	Colouring Type Code	Colour Code	Colour Name	Abbreviation
4D31	A	0583	DEEP PURPLISH BLUE SOLID E	DPBSE
	B	003E	PASTEL DARK GRAY	PGD
4D32	A	0583	DEEP PURPLISH BLUE SOLID E	DPBSE
	B	003E	PASTEL DARK GRAY	PGD
4D33	A	0583	DEEP PURPLISH BLUE SOLID E	DPBSE
	B	003E	PASTEL DARK GRAY	PGD
4D34	A	0583	DEEP PURPLISH BLUE SOLID E	DPBSE
	B	003E	PASTEL DARK GRAY	PGD

(5) Model Code – Production Code Number of Model Listed in This Parts Catalogue

Model Code	Production Code No.	Country (destination)
4D31	010	U.S.A.
4D32	010	CANADA
4D33	010	EUROPE
4D34	010	AUSTRALIA
		NEW ZEALAND
	020	JAPAN

Model Code	Production Code No.	Country (destination)

CONTENTS

ENGINE

CYLINDER HEAD B2
CYLINDER B4
CRANKSHAFT & PISTON B5
VALVE B7
CAMSHAFT & CHAIN B8
OIL PUMP B9
OIL COOLER B10
INTAKE B11
CARBURETOR B12
EXHAUST B15
CRANKCASE C2
CRANKCASE COVER 1 ..... C3
STARTER CLUTCH C5
CLUTCH C6
TRANSMISSION C8
SHIFT CAM & FORK C9

CHASSIS

FRAME C10
FRONT FENDER C12
REAR FENDER C13
REAR ARM C15
REAR SUSPENSION D2
FRONT SUSPENSION & WHEEL D3
STEERING D5
FUEL TANK D6
SEAT D7
FRONT WHEEL D8
FRONT BRAKE CALIPER D9
REAR WHEEL D11
REAR BRAKE CALIPER D12
STEERING HANDLE & CABLE D13
FRONT MASTER CYLINDER D14
STAND & FOOTREST D15
REAR MASTER CYLINDER E2
GUARD E3
GENERATOR E4
STARTING MOTOR E5
HEADLIGHT E6
TAILLIGHT E7
TAILLIGHT 2 ..... E8
HANDLE SWITCH & LEVER E9
ELECTRICAL 1 ..... E10
ELECTRICAL 2 ..... E12
GRAPHICS E13
EMBLEM & LABEL 1 ..... E14
EMBLEM & LABEL 2 ..... E15
EMBLEM & LABEL 3 ..... F2
EMBLEM & LABEL 4 ..... F3
EMBLEM & LABEL 5 ..... F4

INDEX

NUMERICAL INDEX M1

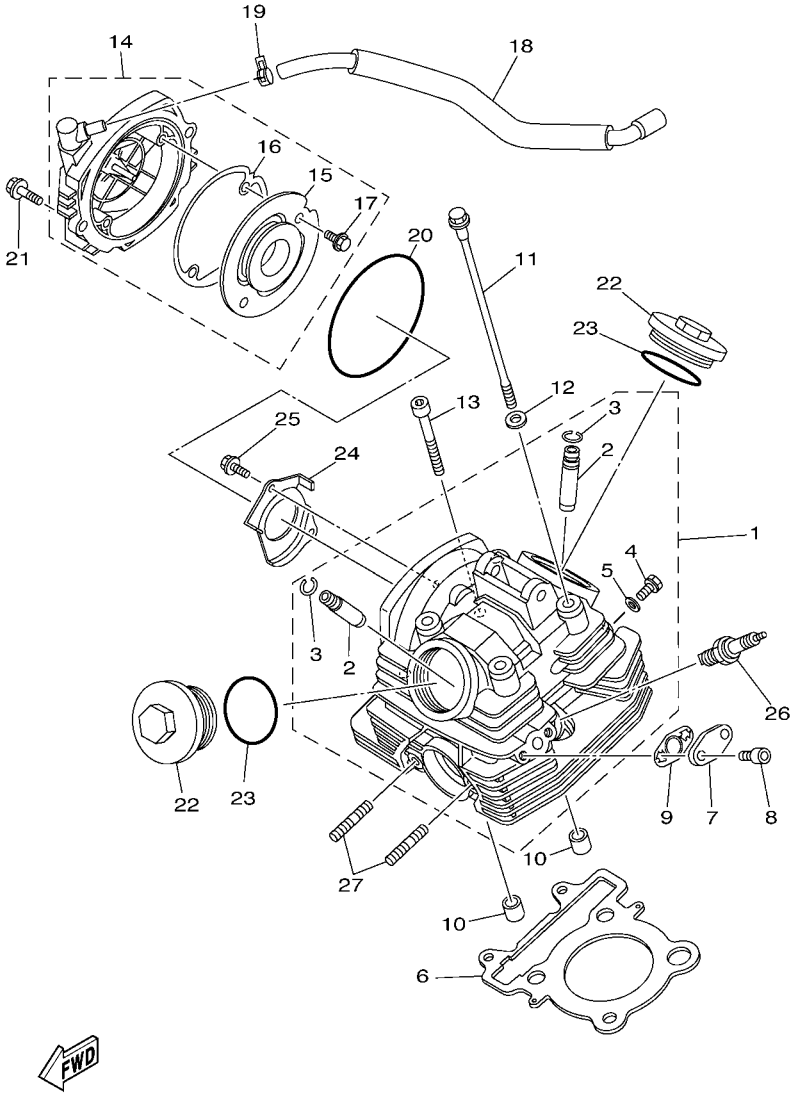

4D31100-G010

FIG. 1 CYLINDER HEAD

REF. NO.	PART NO.	DESCRIPTION	USA	CAN	EUR	OCE	JPN	REMARKS
1	3C5–11102–00	CYLINDER HEAD ASSY	1	1	1	1	1	
2	5H0–11133–11	.GUIDE, VALVE 1	2	2	2	2	2	
3	93440–10085	.CIRCLIP	2	2	2	2	2	
4	90153–06002	.SCREW, HEXAGON	1	1	1	1	1	
5	90430–06014	.GASKET	1	1	1	1	1	
6	5XT–11181–00	GASKET, CYLINDER HEAD 1	1	1	1	1	1	
7	4D3–1112F–00	PLATE 2	1	1	1	1	1	
8	91312–06016	BOLT	2	2	2	2	2	
9	5XT–14815–00	GASKET	1	1	1	1	1	
10	99530–14016	PIN, DOWEL	2	2	2	2	2	
11	90105–08160	BOLT, FLANGE	4	4	4	4	4	
12	90201–08609	WASHER, PLATE	4	4	4	4	4	
13	91312–08045	BOLT	2	2	2	2	2	
14	4D3–11190–00	COVER, CYLINDER HEAD 1	1	1	1	1	1	
15	5XT–11165–00	.PLATE, BREATHER	1	1	1	1	1	
16	4D3–11196–00	.GASKET, CYLINDER HEAD SIDE	1	1	1	1	1	
17	90105–06126	.BOLT, FLANGE	2	2	2	2	2	
18	4D3–11166–00	PIPE, BREATHER 1	1	1	1	1	1	
19	90467–12053	CLIP	1	1	1	1	1	
20	93211–05471	O-RING	1	1	1	1	1	
21	95022–06020	BOLT, FLANGE	2	2	2	2	2	
22	4D3–11186–00	COVER, CYLINDER HEAD SIDE 2	2	2	2	2	2	
23	93210–54001	O-RING	2	2	2	2	2	
24	5XT–1111F–00	PLATE	1	1	1	1	1	
25	90105–06078	BOLT, FLANGE	2	2	2	2	2	
26	94701–00345	PLUG, SPARK (NGK DR7EA)	1	1	1	1		WITH RESISTER
	94703–00345	PLUG, SPARK (NGK DR7EA)					1	

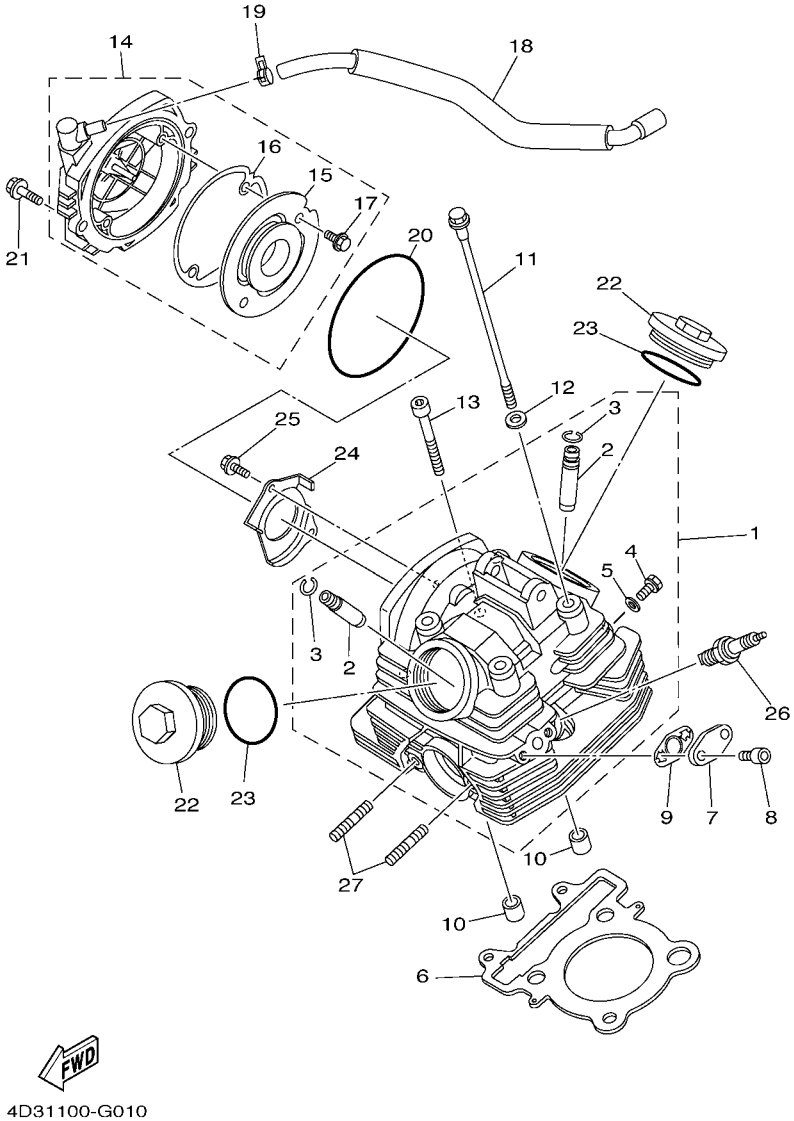

FIG. 1 CYLINDER HEAD

REF. NO.	PART NO.	DESCRIPTION	USA	CAN	EUR	OCE	JPN	REMARKS
27	90116–08023	BOLT, STUD	2	2	2	2	2	

FIG. 2 CYLINDER

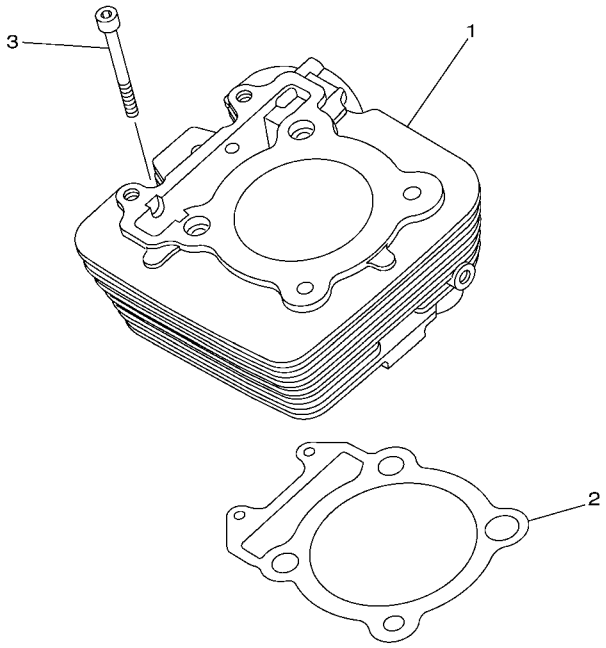

REF. NO.	PART NO.	DESCRIPTION	USA	CAN	EUR	OCE	JPN	REMARKS
1	4D3–11311–00	CYLINDER 1	1	1	1	1	1	
2	4D3–11351–00	GASKET, CYLINDER	1	1	1	1	1	
3	91312–06065	BOLT	2	2	2	2	2	

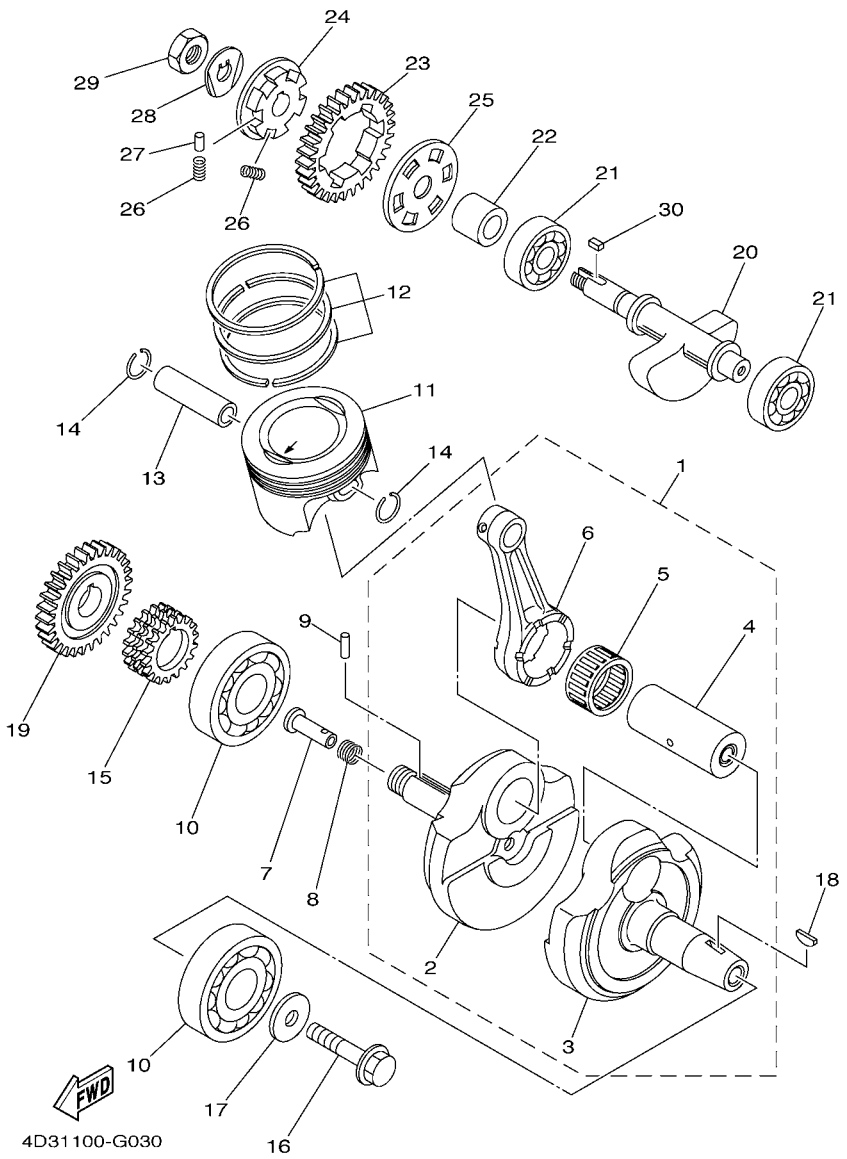

FIG. 3 CRANKSHAFT & PISTON

REF. NO.	PART NO.	DESCRIPTION	USA	CAN	EUR	OCE	JPN	REMARKS
1	4D3–11400–00	CRANKSHAFT ASSY	1	1	1	1	1	
2	4D3–11412–00	.CRANK 1	1	1	1	1	1	
3	4D3–11422–00	.CRANK 2	1	1	1	1	1	
4	1S4–11681–00	.PIN, CRANK 1	1	1	1	1	1	
5	93310–63239	.BEARING	1	1	1	1	1	
6	1S4–11651–00	.ROD, CONNECTING	1	1	1	1	1	
7	90240–07105	PIN, CLEVIS	1	1	1	1	1	
8	90501–07629	SPRING, COMPRESSION	1	1	1	1	1	
9	93602–13177	PIN, DOWEL	1	1	1	1	1	
10	93306–37804	BEARING	2	2	2	2	2	
11	1S4–11631–10–A0	PISTON (STD)	1	1	1	1	1	
12	4XV–11603–00	PISTON RING SET (STD)	1	1	1	1	1	
13	4XV–11633–00	PIN, PISTON	1	1	1	1	1	
14	90468–12069	CLIP	2	2	2	2	2	
15	5BP–11549–00	SPROCKET, CAM CHAIN	1	1	1	1	1	
16	90105–10430	BOLT, FLANGE	1	1	1	1	1	
17	90201–102R1	WASHER, PLATE	1	1	1	1	1	
18	90280–05048	KEY, WOODRUFF	1	1	1	1	1	
19	1S4–11536–00	GEAR, DRIVE	1	1	1	1	1	
20	5XT–11454–00	WEIGHT 1	1	1	1	1	1	
21	93306–30214	BEARING	2	2	2	2	2	
22	5XT–11478–00	COLLAR	1	1	1	1	1	
23	1S4–11531–00	GEAR, BALANCE WEIGHT	1	1	1	1	1	
24	5XT–11496–00	BOSS, BUFFER	1	1	1	1	1	
25	5XT–11533–00	PLATE, ABSORBER	1	1	1	1	1	
26	90501–22721	SPRING, COMPRESSION	6	6	6	6	6	
27	93605–10090	PIN, DOWEL	3	3	3	3	3	

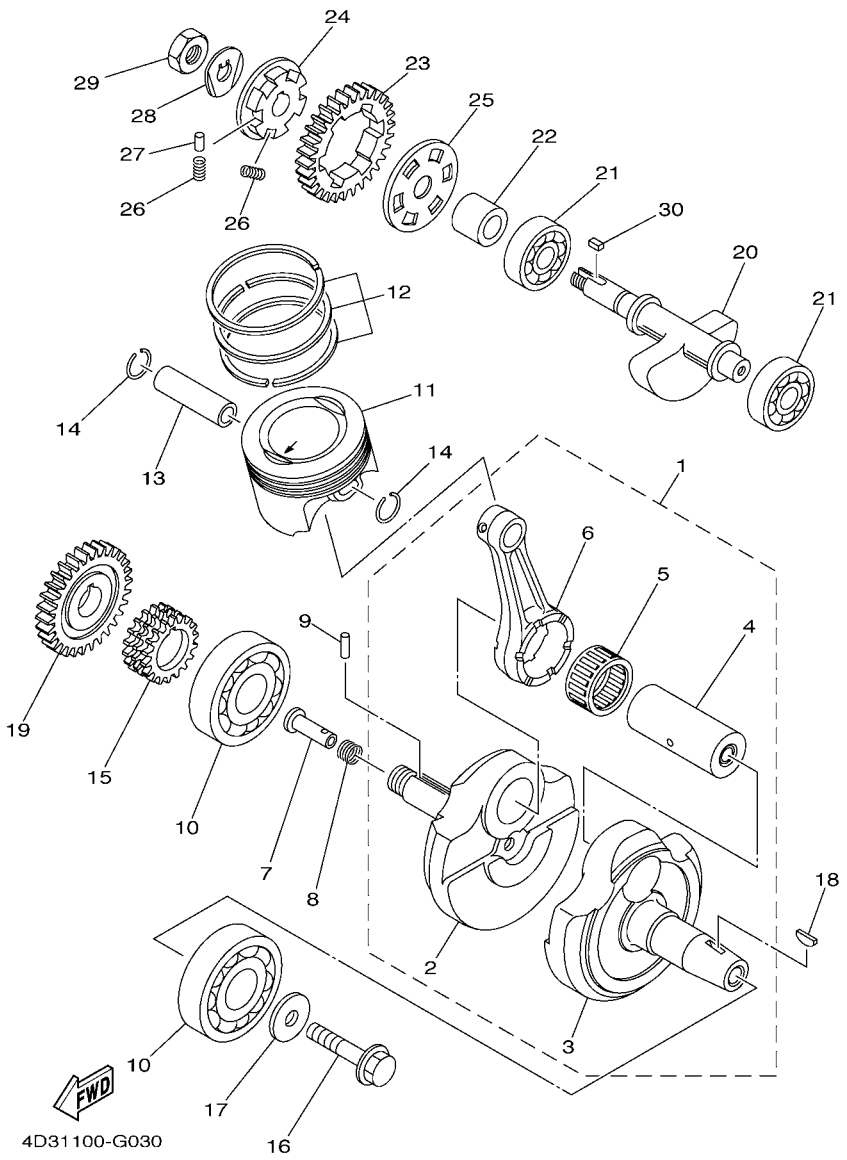

FIG. 3 CRANKSHAFT & PISTON

REF. NO.	PART NO.	DESCRIPTION	USA	CAN	EUR	OCE	JPN	REMARKS
28	90215–12272	WASHER, LOCK	1	1	1	1	1	
29	90170–12370	NUT	1	1	1	1	1	
30	90282–05013	KEY, STRAIGHT	1	1	1	1	1	

FIG. 4 VALVE

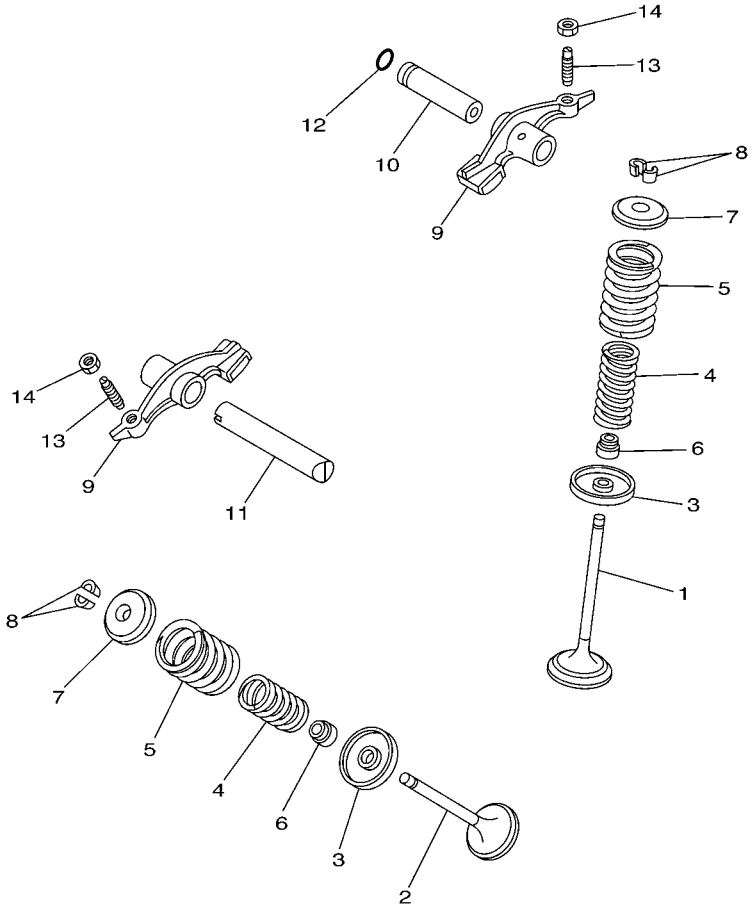

5BP1460-1040

REF. NO.	PART NO.	DESCRIPTION	USA	CAN	EUR	OCE	JPN	REMARKS
1	5H0–12111–02	VALVE, INTAKE	1	1	1	1	1	
2	5XT–12121–00	VALVE, EXHAUST	1	1	1	1	1	
3	4G0–12116–01	SEAT, VALVE SPRING	2	2	2	2	2	
4	11H–12113–00	SPRING, VALVE INNER	2	2	2	2	2	
5	11H–12114–00	SPRING, VALVE OUTER	2	2	2	2	2	
6	5H0–12119–00	SEAL, VALVE STEM	2	2	2	2	2	
7	4G0–12117–00	RETAINER, VALVE SPRING	2	2	2	2	2	
8	4G0–12118–00	COTTER, VALVE	4	4	4	4	4	
9	36X–12151–00	ARM, VALVE ROCKER	2	2	2	2	2	
10	5H0–12156–00	SHAFT, ROCKER 2	1	1	1	1	1	
11	5H0–12146–00	SHAFT, ROCKER	1	1	1	1	1	
12	93210–09165	O-RING	1	1	1	1	1	
13	5XT–12159–00	SCREW, VALVE ADJUSTING	2	2	2	2	2	
14	90170–06128	NUT	2	2	2	2	2	

FIG. 5 CAMSHAFT & CHAIN

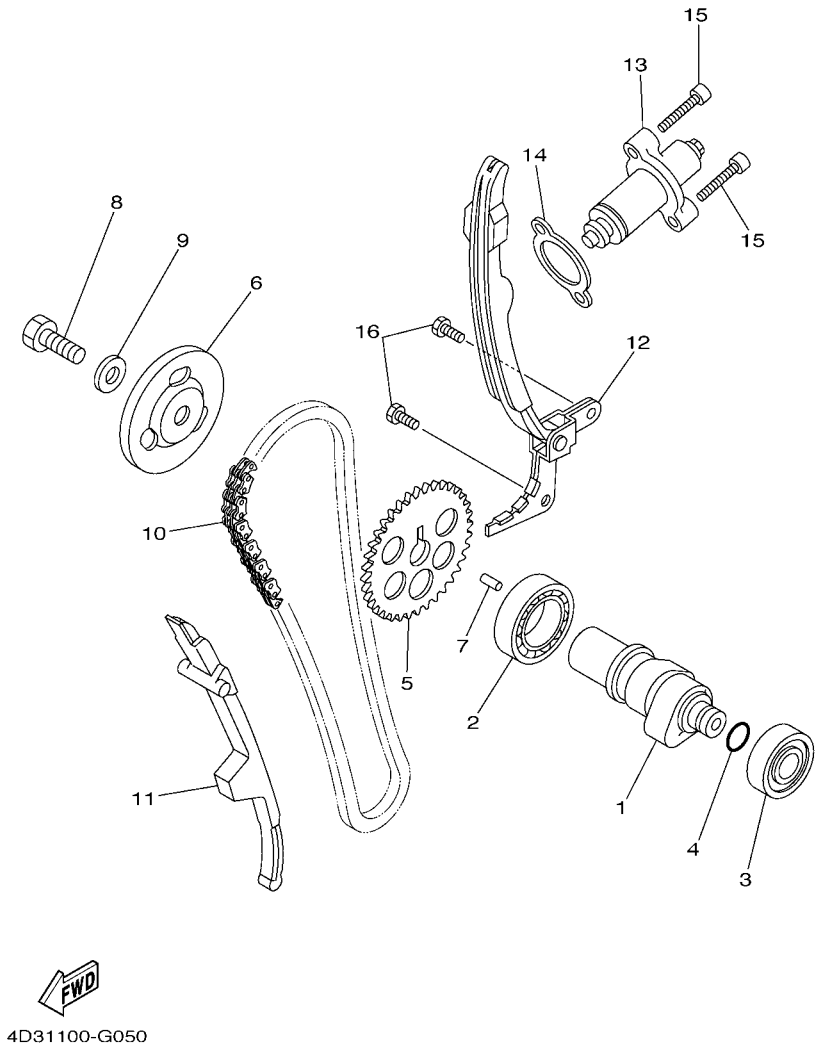

REF. NO.	PART NO.	DESCRIPTION	USA	CAN	EUR	OCE	JPN	REMARKS
1	1S4–12171–00	CAMSHAFT 1	1	1	1	1	1	
2	93306–00518	BEARING	1	1	1	1	1	
3	93306–20204	BEARING	1	1	1	1	1	KOYO
4	93210–11453	O-RING	1	1	1	1	1	
5	5XT–12176–00	SPROCKET, CAM CHAIN	1	1	1	1	1	
6	4KB–11145–00	PLATE, BREATHER 2	1	1	1	1	1	
7	93604–10011	PIN, DOWEL	1	1	1	1	1	
8	90101–10016	BOLT	1	1	1	1	1	
9	90201–10591	WASHER, PLATE	1	1	1	1	1	
10	94582–19104	CHAIN (DID SCR-0404 SV 104LE)	1	1	1	1	1	
11	5BP–12231–00	GUIDE, STOPPER 1	1	1	1	1	1	
12	5XT–12241–00	GUIDE, STOPPER 2	1	1	1	1	1	
13	5XT–12210–00	TENSIONER ASSY, CAM CHAIN	1	1	1	1	1	
14	4FM–12213–00	GASKET, TENSIONER CASE	1	1	1	1	1	
15	91312–06025	BOLT	2	2	2	2	2	
16	90101–06043	BOLT	2	2	2	2	2	

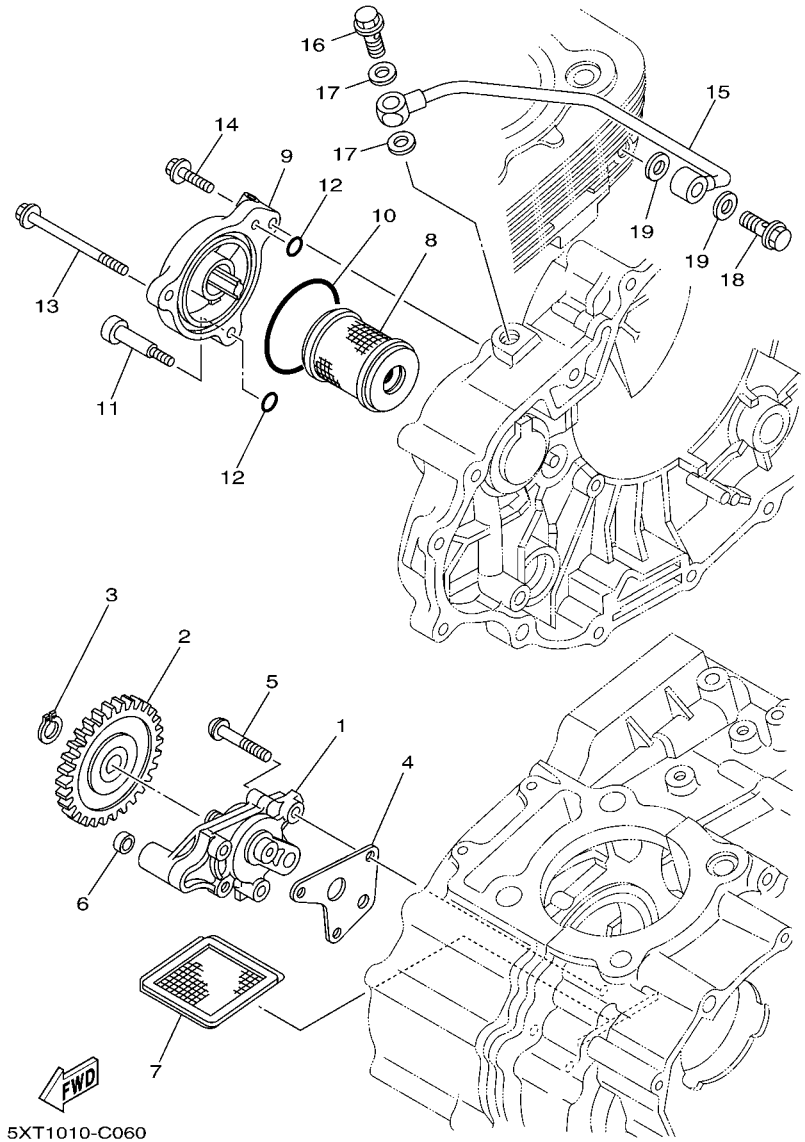

FIG. 6 OIL PUMP

REF. NO.	PART NO.	DESCRIPTION	USA	CAN	EUR	OCE	JPN	REMARKS
1	4D3–13300–00	OIL PUMP ASSY	1	1	1	1	1	
2	4D3–13326–00	GEAR, PUMP DRIVEN 2	1	1	1	1	1	
3	99009–11400	CIRCLIP	1	1	1	1	1	
4	4D3–13329–00	GASKET, PUMP COVER	1	1	1	1	1	
5	90149–06093	SCREW	3	3	3	3	3	
6	90430–06156	GASKET	1	1	1	1	1	
7	22F–13411–01	STRAINER, OIL	1	1	1	1	1	
8	5TA–13440–00	ELEMENT ASSY, OIL CLEANER	1	1	1	1	1	
9	4D3–13447–00	COVER, OIL ELEMENT	1	1	1	1	1	
10	93210–54175	O-RING	1	1	1	1	1	
11	90109–06169	BOLT	1	1	1	1	1	
12	93210–07135	O-RING	2	2	2	2	2	
13	91312–06070	BOLT	1	1	1	1	1	
14	91312–06020	BOLT	1	1	1	1	1	
15	5XT–13161–00	PIPE, DELIVERY 1	1	1	1	1	1	
16	90401–10061	BOLT, UNION	1	1	1	1	1	
17	90430–10171	GASKET	2	2	2	2	2	
18	90401–08009	BOLT, UNION	1	1	1	1	1	
19	90430–08119	GASKET	2	2	2	2	2	

FIG. 7 OIL COOLER

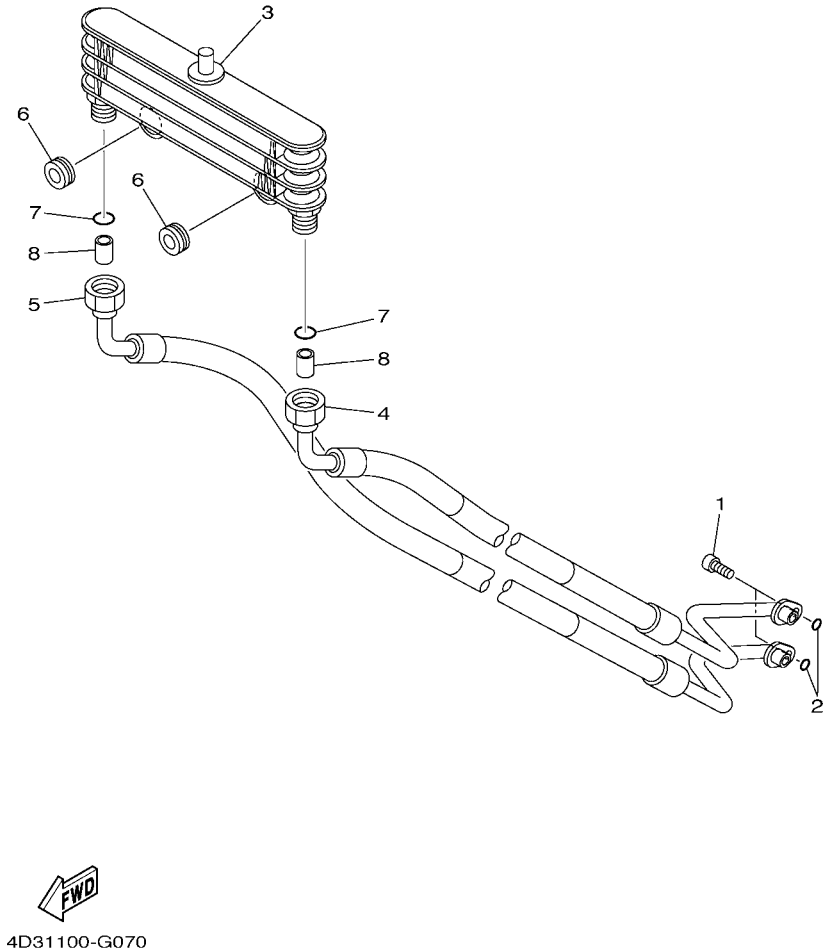

REF. NO.	PART NO.	DESCRIPTION	USA	CAN	EUR	OCE	JPN	REMARKS
1	91312–06016	BOLT	2	2	2	2	2	
2	93210–10197	O-RING	2	2	2	2	2	
3	4KB–13470–00	OIL COOLER ASSY	1	1	1	1	1	
4	4D3–13464–00	HOSE, OIL 1	1	1	1	1	1	
5	4D3–13465–00	HOSE, OIL 2	1	1	1	1	1	
6	90480–15235	GROMMET	2	2	2	2	2	
7	93210–12152	O-RING	2	2	2	2	2	
8	93612–16254	PIN, DOWEL	2	2	2	2	2	

FIG. 8 INTAKE

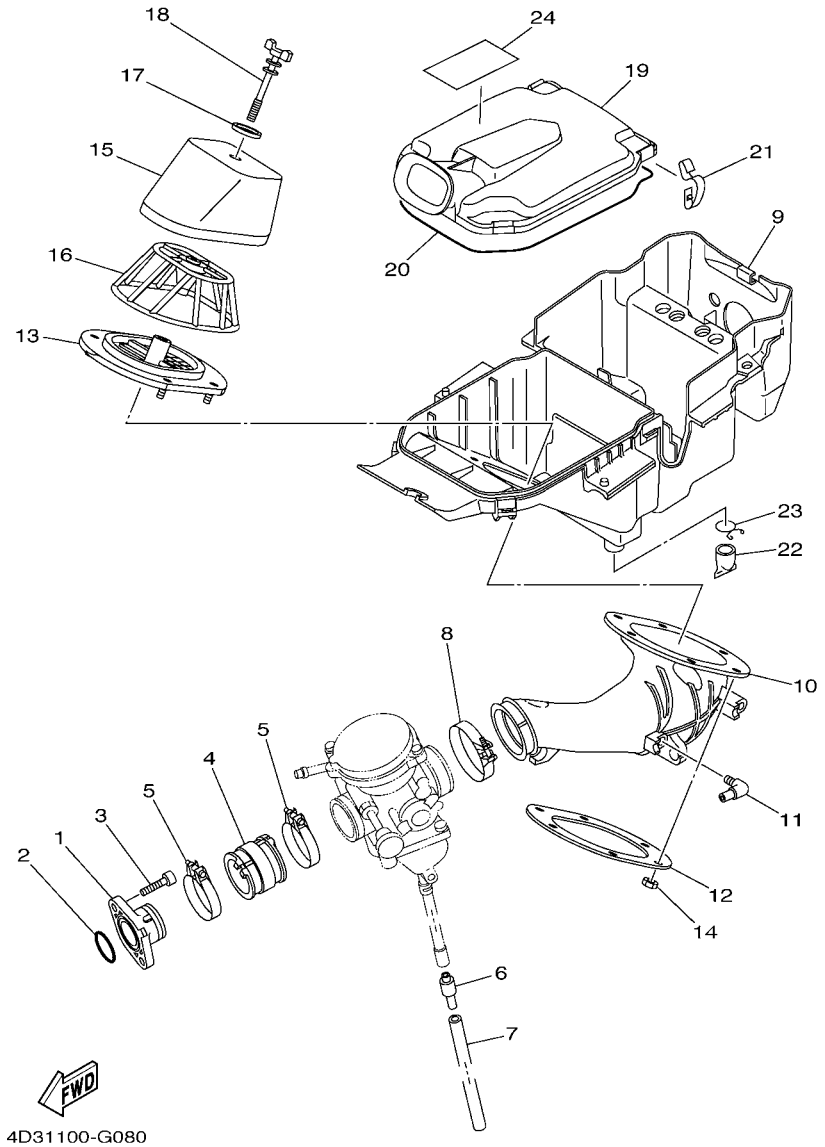

REF. NO.	PART NO.	DESCRIPTION	USA	CAN	EUR	OCE	JPN	REMARKS
1	4D3–13586–00	JOINT, CARBURETOR 1	1	1	1	1	1	
2	93210–35537	O-RING	1	1	1	1	1	
3	91312–06020	BOLT	2	2	2	2	2	
4	4D3–13596–00	JOINT, CARBURETOR 2	1	1	1	1	1	
5	90450–47002	HOSE CLAMP ASSY	2	2	2	2	2	
6	24W–14193–00	PIPE	1	1	1	1	1	
7	91A20–07010	TUBE, FLEXIBLE VINYL	1	1	1	1	1	
8	90450–58003	HOSE CLAMP ASSY	1	1	1	1	1	
9	4D3–14411–00	CASE, AIR CLEANER 1	1	1	1	1	1	
10	4D3–14453–00	JOINT, AIR CLEANER 1	1	1	1	1	1	
11	31A–14419–00	PIPE	1	1	1	1	1	
12	2XJ–14477–00	PLATE	1	1	1	1	1	
13	4D3–14459–00	HOLDER, GUIDE	1	1	1	1	1	
14	95602–05100	NUT, U	6	6	6	6	6	
15	2XJ–14451–00	ELEMENT, AIR CLEANER	1	1	1	1	1	
16	2XJ–14458–00	GUIDE	1	1	1	1	1	
17	90209–06014	WASHER	1	1	1	1	1	
18	90122–06035	BOLT, WING	1	1	1	1	1	
19	4D3–14412–00	CAP, CLEANER CASE 1	1	1	1	1	1	
20	4D3–14452–00	SEAL	1	1	1	1	1	
21	5GH–14436–00	HOOK	4	4	4	4	4	
22	59V–14457–00	SEAL	1	1	1	1	1	
23	90467–220A1	CLIP	1	1	1	1	1	
24	4D3–2177C–00	PLATE, EPA OFFROAD ATV 1	1					

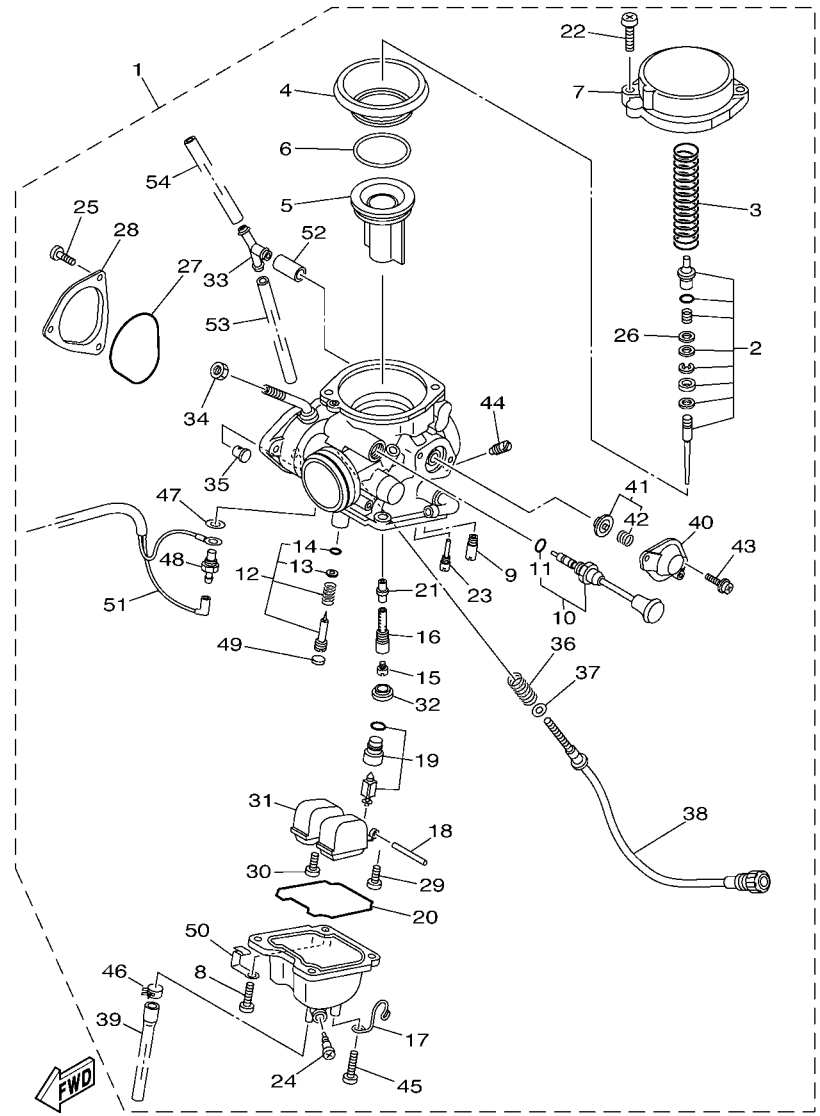

4D31100-G090

FIG. 9 CARBURETOR

REF. NO.	PART NO.	DESCRIPTION	USA	CAN	EUR	OCE	JPN	REMARKS
1	4D3–14901–00	CARBURETOR ASSY 1	1	1				
	4D3–14901–10	CARBURETOR ASSY 1			1	1	1	
2	4D3–1490J–00	.NEEDLE SET	1	1				
	4D3–1490J–10	.NEEDLE SET			1	1	1	
3	4D3–14933–00	.SPRING, DIAPHRAGM	1	1	1	1	1	
4	4D3–14841–00	.DIAPHRAGM	1	1	1	1	1	
5	4D3–14112–00	.VALVE, THROTTLE 1	1	1	1	1	1	
6	5GH–14918–10	.RING	1	1	1	1	1	
7	4D3–14958–00	.COVER, DIAPHRAGM	1	1	1	1	1	
8	98507–04010	.SCREW, PAN HEAD	4	4	4	4	4	
9	4KM–14142–25	.JET, PILOT (# 25)	1	1	1	1	1	
10	4D3–1490A–00	.DIAPHRAGM SET 1	1	1	1	1	1	
11	1AE–14147–00	..O-RING	1	1	1	1	1	
12	4D3–14105–00	.PILOT SCREW SET	1	1	1	1	1	
13	3H1–14962–00	..WASHER	1	1	1	1	1	
14	3H1–14147–00	..O-RING	1	1	1	1	1	
15	620–1423E–53	.JET, MAIN (#133.8)	1	1	1	1	1	
16	4D3–14261–00	.HOLDER	1	1	1	1	1	
17	4D3–14937–00	.CLIP	1	1	1	1	1	
18	127–14186–00	.PIN, FLOAT	1	1	1	1	1	
19	5YT–14107–20	.NEEDLE VALVE SET	1	1	1	1	1	
20	5DM–14561–00	.O-RING	1	1	1	1	1	
21	5DM–1414M–40	.NOZZLE, MAIN	1	1	1	1	1	
22	4KM–14216–00	.SCREW	2	2	2	2	2	
23	3G2–14231–11	.JET, POWER (# 55)	1	1	1	1	1	
24	12R–14191–00	.PLUG, DRAIN	1	1	1	1	1	
25	98507–04006	.SCREW, PAN HEAD	3	3	3	3	3	

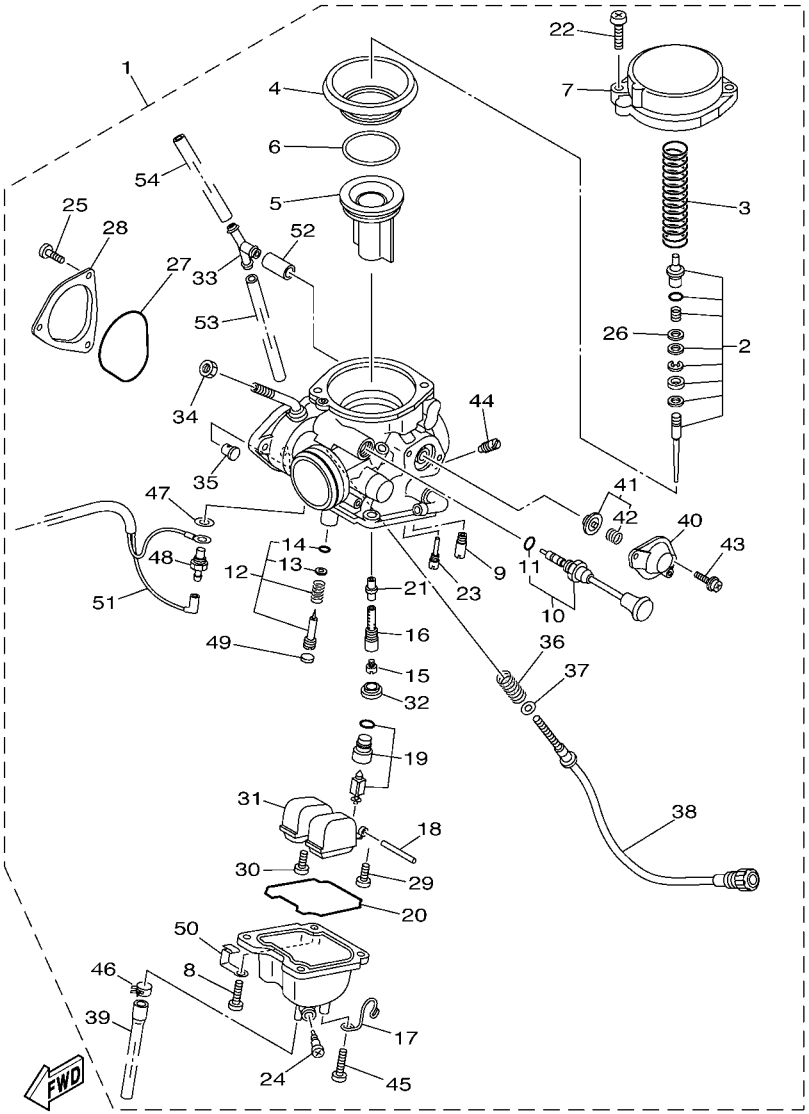

FIG. 9 CARBURETOR

REF. NO.	PART NO.	DESCRIPTION	USA	CAN	EUR	OCE	JPN	REMARKS
26	5DM–14952–00	.WASHER	1	1	1	1	1	
27	5LP–14147–00	.O-RING	1	1	1	1	1	
28	4WV–14293–00	.COVER 1	1	1	1	1	1	
29	98507–04008	.SCREW, PAN HEAD	1	1	1	1	1	
30	1FN–14565–00	.SCREW	1	1	1	1	1	
31	5DM–14985–00	.FLOAT	1	1	1	1	1	
32	5V7–14153–00	.WASHER, MAIN JET	1	1	1	1	1	
33	4D3–14988–00	.PIPE, STARTER CONNECTING	1	1	1	1	1	
34	1S3–14161–00	.NUT, CABLE ADJUSTING	1	1	1	1	1	
35	3GD–14155–00	.GUIDE, CABLE	1	1	1	1	1	
36	137–14133–00	.SPRING, THROTTLE STOP	1	1	1	1	1	
37	5FU–14962–00	.WASHER	1	1	1	1	1	
38	4D3–14123–00	.SCREW, AIR ADJUSTING	1	1	1	1	1	
39	4D3–14193–00	.PIPE	1	1	1	1	1	
40	5AP–14280–00	.COVER, CARBURETOR	1	1	1	1	1	
41	4D3–1490H–00	.DIAPHRAGM SET 5	1	1	1	1	1	
42	3HT–14934–00	..SPRING, THROTTLE STOP	1	1	1	1	1	
43	97607–04114	.SCREW,WITH WASHER	2	2	2	2	2	
44	1HX–14231–34	.JET, MAIN (#170)	1	1	1	1	1	
45	98507–05010	.SCREW, PAN HEAD	1	1	1	1	1	
46	90467–09026	.CLIP	1	1	1	1	1	
47	5CY–14951–00	.WASHER	1	1	1	1	1	
48	5FU–83790–00	.HEATER ASSY (15W)	1	1	1	1	1	
49	3F9–14118–00	.CAP	1	1				
50	90461–06087	.CLAMP	1	1	1	1	1	
51	4D3–82509–00	.WIRE, SUB LEAD	1	1	1	1	1	
52	4D3–14196–00	.PIPE	1	1	1	1	1	

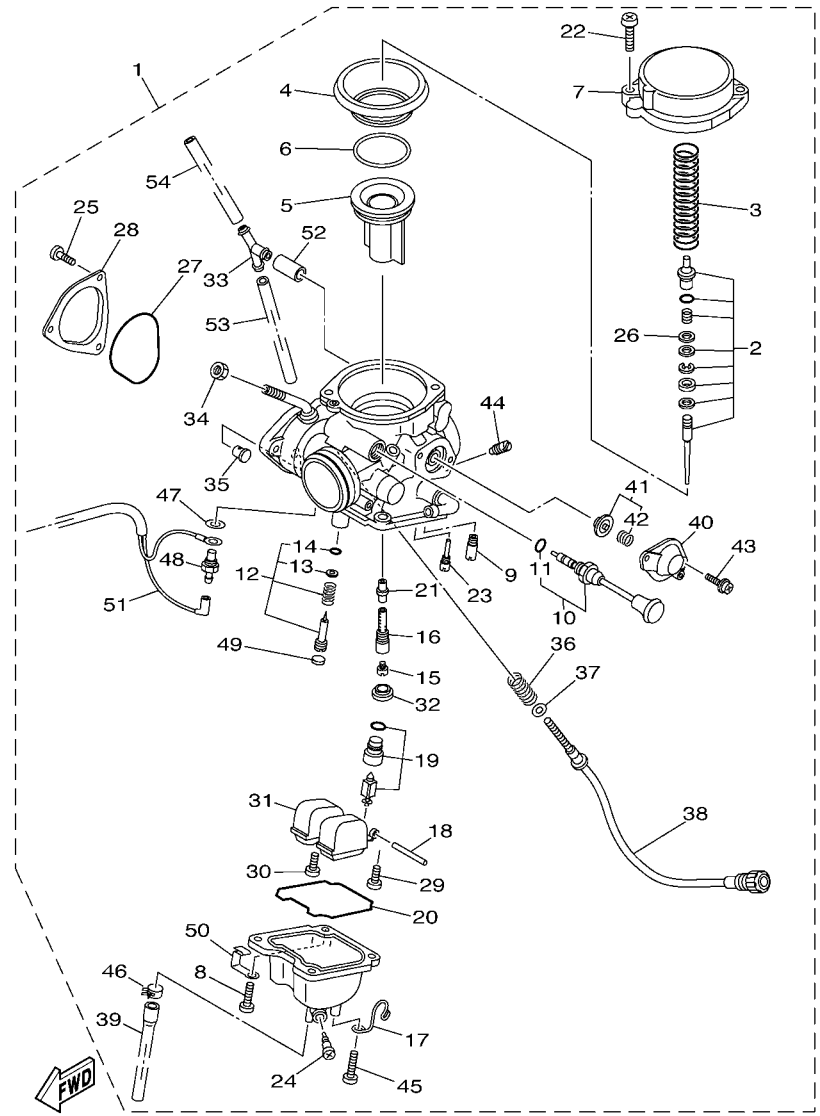

FIG. 9 CARBURETOR

REF. NO.	PART NO.	DESCRIPTION	USA	CAN	EUR	OCE	JPN	REMARKS
53	1UM–14197–00	.PIPE	1	1	1	1	1	
54	5JJ–14987–00	.HOSE	1	1	1	1	1	

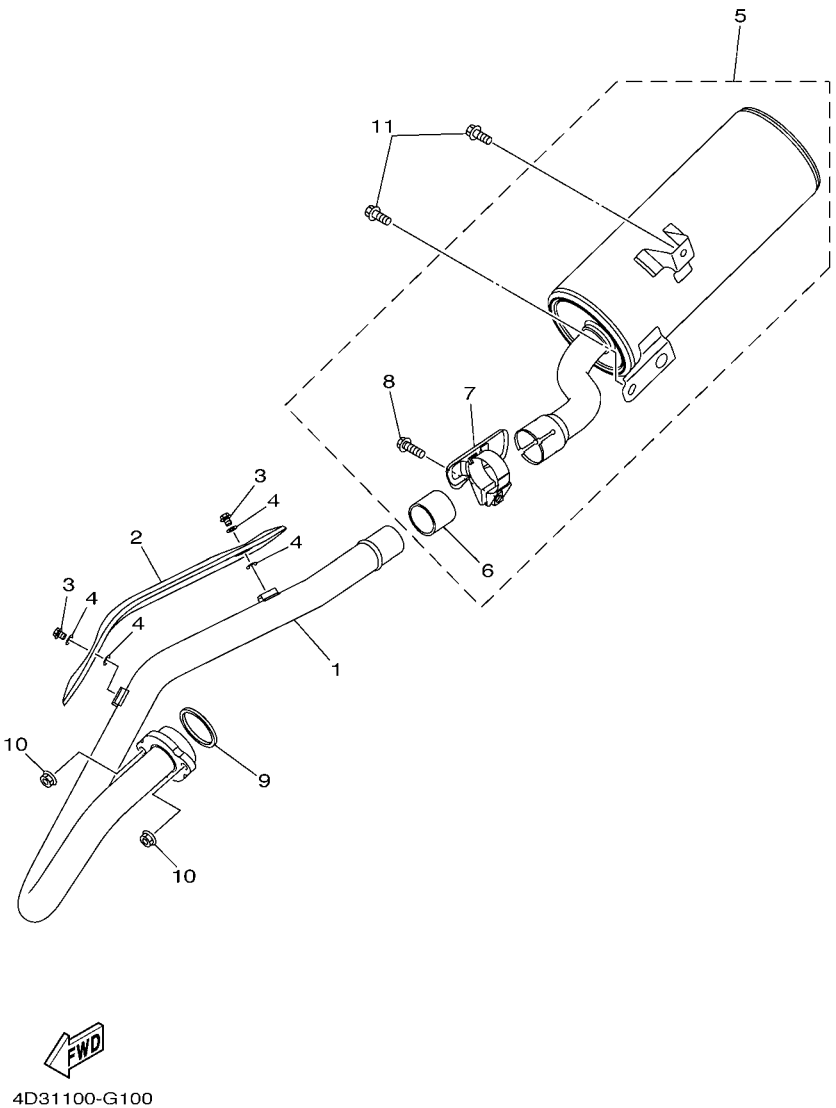

FIG. 10 EXHAUST

REF. NO.	PART NO.	DESCRIPTION	USA	CAN	EUR	OCE	JPN	REMARKS
1	4D3–14611–00	PIPE, EXHAUST 1	1	1	1	1	1	
2	4D3–14628–00	PROTECTOR, EXHAUST PIPE	1	1	1	1	1	
3	98902–06008	SCREW, BIND	2	2	2	2	2	
4	90201–05017	WASHER, PLATE	4	4	4	4	4	
5	4D3–14710–00	MUFFLER ASSY 1	1	1	1	1	1	
6	3YF–14714–00	.GASKET, MUFFLER	1	1	1	1	1	
7	4D3–14718–00	.PROTECTOR, MUFFLER 1	1	1	1	1	1	
8	95024–08025	.BOLT, FLANGE	1	1	1	1	1	
9	3GD–14613–00	GASKET, EXHAUST PIPE	1	1	1	1	1	
10	95702–08500	NUT, WITH WASHER	2	2	2	2	2	
11	95812–08016	BOLT, FLANGE	2	2	2	2	2	

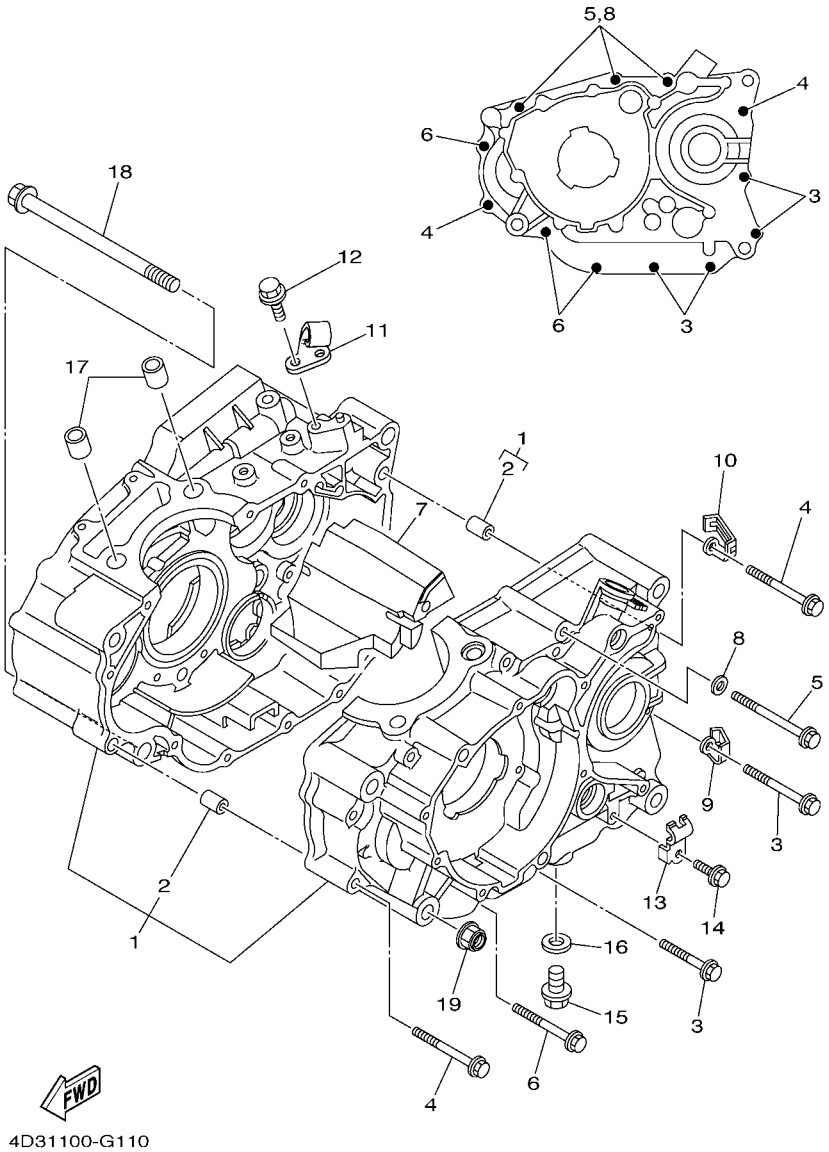

FIG. 11 CRANKCASE

REF. NO.	PART NO.	DESCRIPTION	USA	CAN	EUR	OCE	JPN	REMARKS
1	5XT–15100–07	CRANKCASE ASSY	1	1	1	1	1	
2	99530–10114	.PIN, DOWEL	2	2	2	2	2	
3	95022–06045	BOLT, FLANGE	4	4	4	4	4	
4	95022–06060	BOLT, FLANGE	2	2	2	2	2	
5	95022–06070	BOLT, FLANGE	3	3	3	3	3	
6	95022–06055	BOLT, FLANGE	3	3	3	3	3	
7	4D3–15327–00	SPACER, ENGINE MOUNT	1	1	1	1	1	
8	90430–06014	GASKET	3	3	3	3	3	
9	90462–08045	CLAMP	1	1	1	1	1	
10	90461–08001	CLAMP	1	1	1	1	1	
11	4D3–15441–00	HOLDER, CLUTCH CABLE	1	1	1	1	1	
12	95812–06016	BOLT, FLANGE	1	1	1	1	1	
13	90462–10215	CLAMP	1	1	1	1	1	
14	95022–06010	BOLT, FLANGE	1	1	1	1	1	
15	90340–12059	PLUG, STRAIGHT SCREW	1	1	1	1	1	
16	90430–12213	GASKET	1	1	1	1	1	
17	99530–14016	PIN, DOWEL	2	2	2	2	2	
18	95812–10170	BOLT, FLANGE	1	1	1	1	1	
19	95602–10200	NUT, U FLANGE	1	1	1	1	1	

FIG. 12 CRANKCASE COVER 1

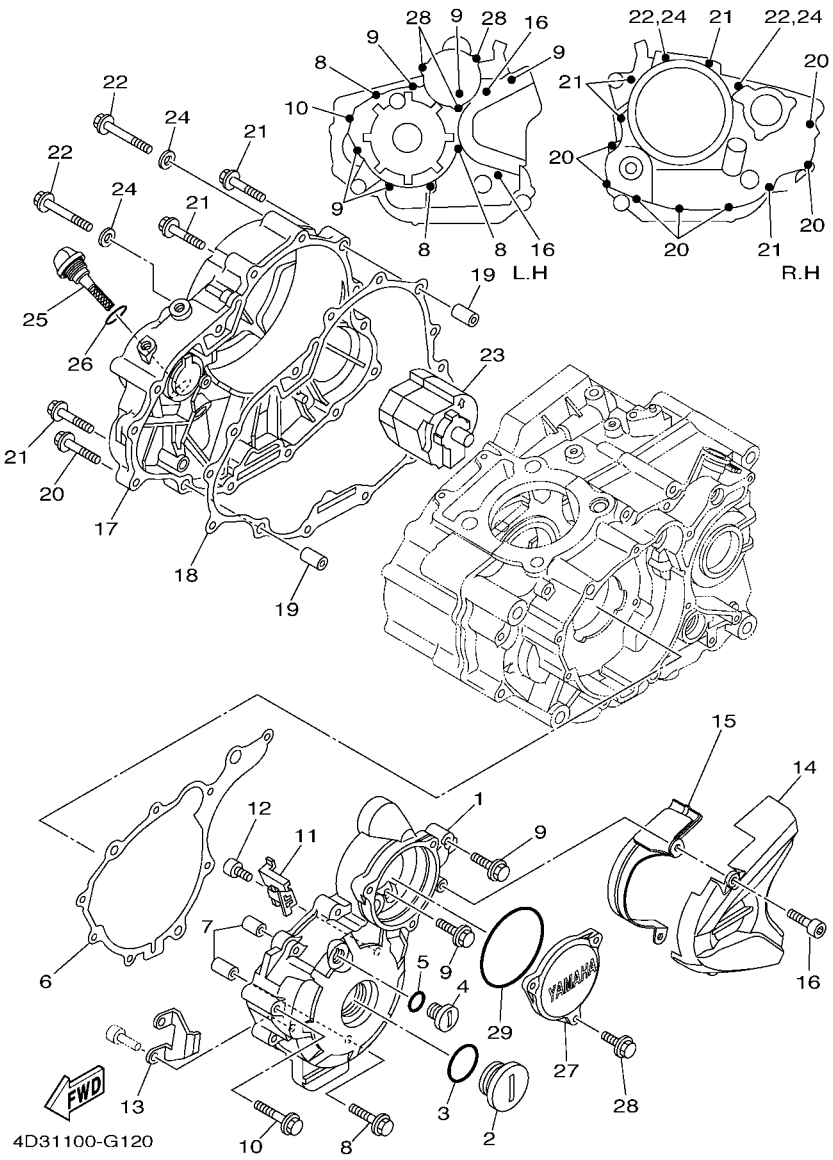

REF. NO.	PART NO.	DESCRIPTION	USA	CAN	EUR	OCE	JPN	REMARKS
1	4D3–15411–00	COVER, CRANKCASE 1	1	1	1	1	1	
2	90340–32005	PLUG, STRAIGHT SCREW	1	1	1	1	1	
3	93210–32172	O-RING	1	1	1	1	1	
4	90340–14014	PLUG, STRAIGHT SCREW	1	1	1	1	1	
5	93210–14369	O-RING	1	1	1	1	1	
6	4D3–15451–00	GASKET, CRANKCASE COVER 1	1	1	1	1	1	
7	99530–10114	PIN, DOWEL	2	2	2	2	2	
8	95022–06040	BOLT, FLANGE	3	3	3	3	3	
9	95022–06030	BOLT, FLANGE	5	5	5	5	5	
10	95022–06045	BOLT, FLANGE	1	1	1	1	1	
11	90465–16011	CLAMP	1	1	1	1	1	
12	90110–05032	BOLT, HEXAGON SOCKET HEAD	1	1	1	1	1	
13	5XT–15113–00	PLATE	1	1	1	1	1	
14	4D3–15418–00	COVER, CHAIN CASE	1	1	1	1	1	
15	4D3–15493–00	PROTECTOR	1	1	1	1	1	
16	91312–06016	BOLT	2	2	2	2	2	
17	4D3–15421–00	COVER, CRANKCASE 2	1	1	1	1	1	
18	4D3–15461–00	GASKET, CRANKCASE COVER 2	1	1	1	1	1	
19	99530–10114	PIN, DOWEL	2	2	2	2	2	
20	95022–06025	BOLT, FLANGE	7	7	7	7	7	
21	95022–06040	BOLT, FLANGE	4	4	4	4	4	
22	95022–06050	BOLT, FLANGE	2	2	2	2	2	
23	4D3–15328–00	SPACER, DAMPER	1	1	1	1	1	
24	90430–06014	GASKET	2	2	2	2	2	
25	4D3–15362–00	PLUG, OIL LEVEL	1	1	1	1	1	
26	93210–19123	O-RING	1	1	1	1	1	
27	4D3–15415–00	COVER, GENERATOR	1	1	1	1	1	

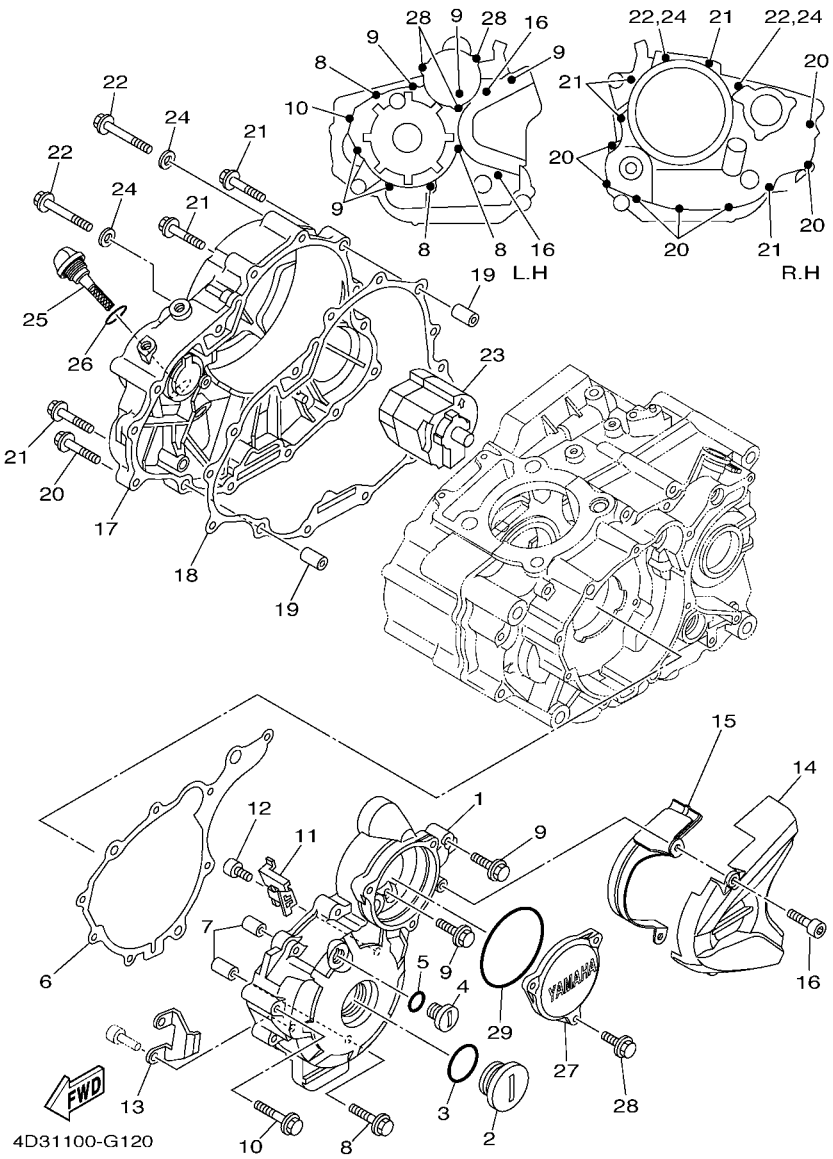

FIG. 12 CRANKCASE COVER 1

REF. NO.	PART NO.	DESCRIPTION	USA	CAN	EUR	OCE	JPN	REMARKS
28	95022–06016	BOLT, FLANGE	3	3	3	3	3	
29	93210–74M68	O-RING	1	1	1	1	1	

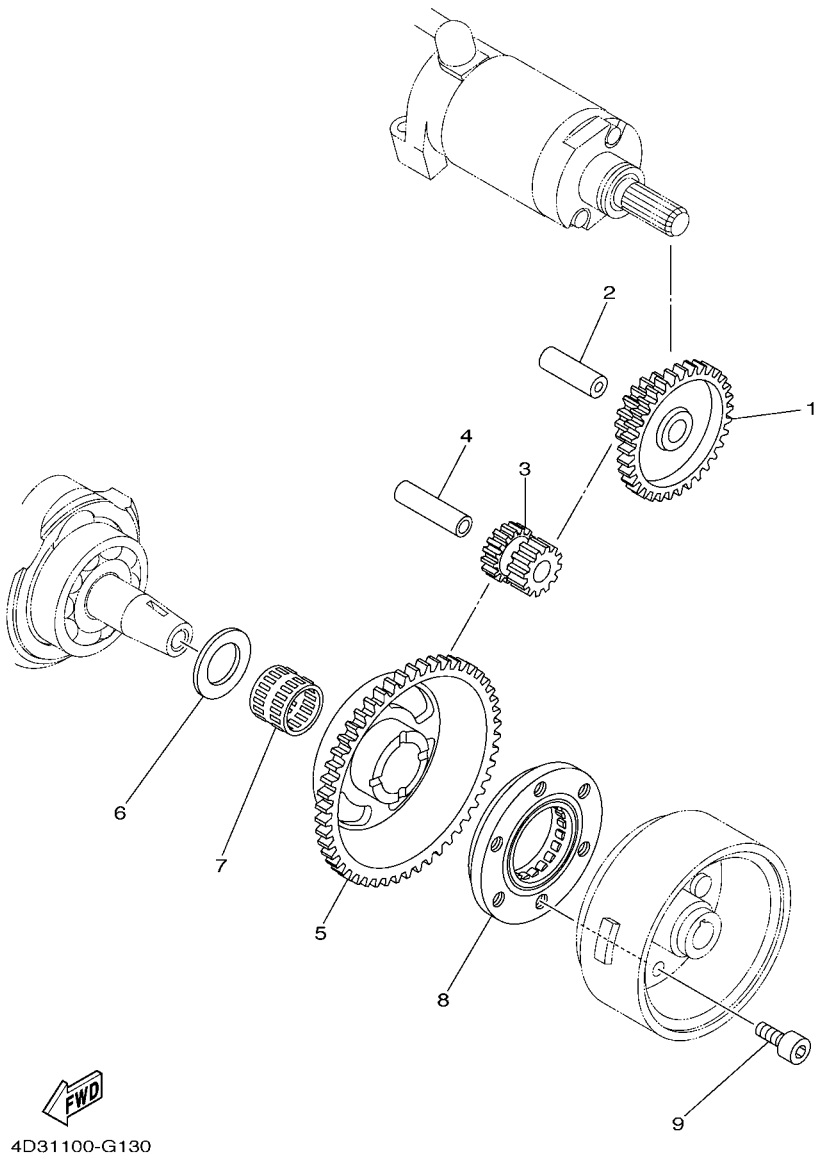

FIG. 13 STARTER CLUTCH

REF. NO.	PART NO.	DESCRIPTION	USA	CAN	EUR	OCE	JPN	REMARKS
1	5XT–15512–00	GEAR, IDLER 1 (19T/72T)	1	1	1	1	1	
2	1VJ–15521–00	SHAFT 1	1	1	1	1	1	
3	5XT–15517–00	GEAR, IDLER 2 (16T/14T)	1	1	1	1	1	
4	36Y–15521–01	SHAFT 1	1	1	1	1	1	
5	5XT–15515–00	GEAR 3 (71T)	1	1	1	1	1	
6	90201–25291	WASHER, PLATE	1	1	1	1	1	
7	93310–225N0	BEARING	1	1	1	1	1	
8	5BP–15590–00	STARTER ONE-WAY ASSY	1	1	1	1	1	
9	90110–08053	BOLT, HEXAGON SOCKET HEAD	3	3	3	3	3	

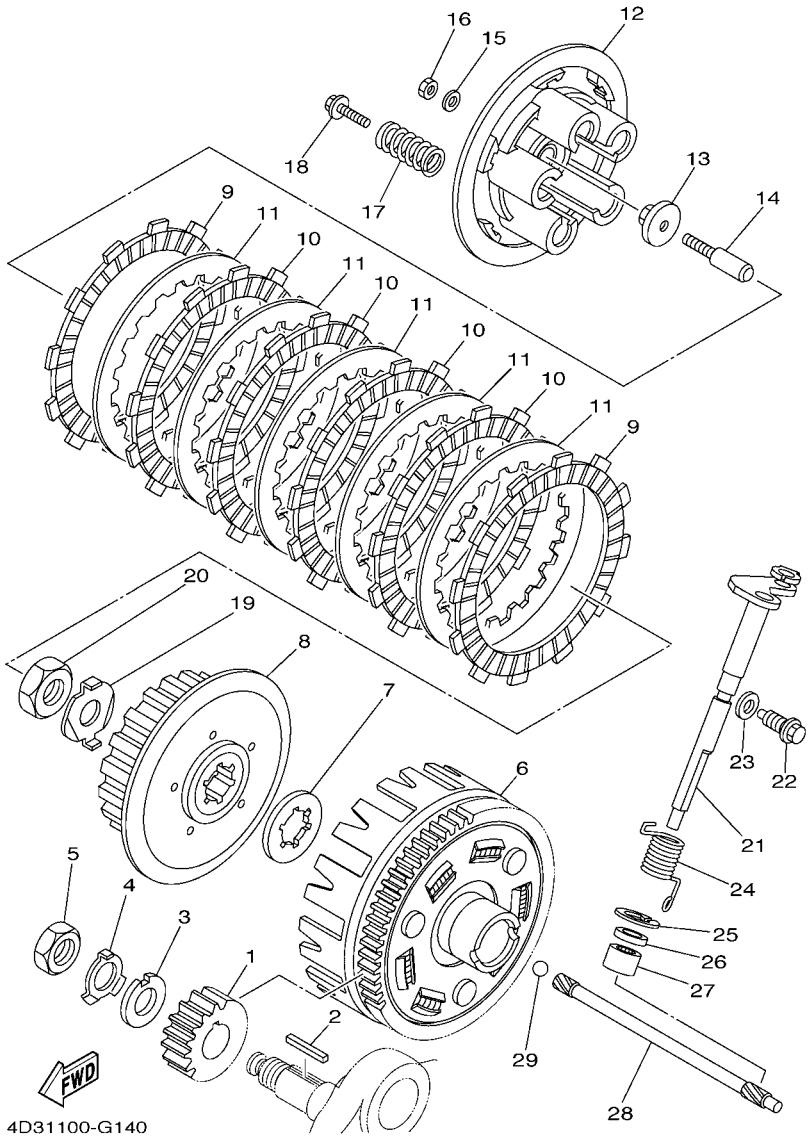

FIG. 14 CLUTCH

REF. NO.	PART NO.	DESCRIPTION	USA	CAN	EUR	OCE	JPN	REMARKS
1	4D3–16111–00	GEAR, PRIMARY DRIVE	1	1	1	1	1	
2	90282–05077	KEY, STRAIGHT	1	1	1	1	1	
3	90214–16063	WASHER, CLAW	1	1	1	1	1	
4	90215–16293	WASHER, LOCK	1	1	1	1	1	
5	90170–16003	NUT	1	1	1	1	1	
6	4D3–16150–00	PRIMARY DRIVEN GEAR COMP.	1	1	1	1	1	
7	30X–16154–00	PLATE, THRUST 1	1	1	1	1	1	
8	4D3–16371–00	BOSS, CLUTCH	1	1	1	1	1	
9	3XJ–16321–00	PLATE, FRICTION	2	2	2	2	2	
10	5DH–16321–00	PLATE, FRICTION	4	4	4	4	4	
11	3XJ–16324–01	PLATE, CLUTCH 1	5	5	5	5	5	
12	4GY–16351–00	PLATE, PRESSURE 1	1	1	1	1	1	
13	1W1–16358–01	PLATE, PUSH	1	1	1	1	1	
14	5XT–16356–00	ROD, PUSH 1	1	1	1	1	1	
15	92902–06200	WASHER	1	1	1	1	1	
16	95302–06600	NUT	1	1	1	1	1	
17	90501–231E9	SPRING, COMPRESSION	5	5	5	5	5	
18	90159–06029	SCREW, WITH WASHER	5	5	5	5	5	
19	90215–16289	WASHER, LOCK	1	1	1	1	1	
20	90170–16326	NUT	1	1	1	1	1	
21	4D3–16381–00	PUSH LEVER COMP.	1	1	1	1	1	
22	90109–08105	BOLT	1	1	1	1	1	
23	90430–08119	GASKET	1	1	1	1	1	
24	90508–203B3	SPRING, TORSION	1	1	1	1	1	
25	99009–20500	CIRCLIP	1	1	1	1	1	
26	93102–12224	OIL SEAL	1	1	1	1	1	
27	93317–11287	BEARING	1	1	1	1	1	

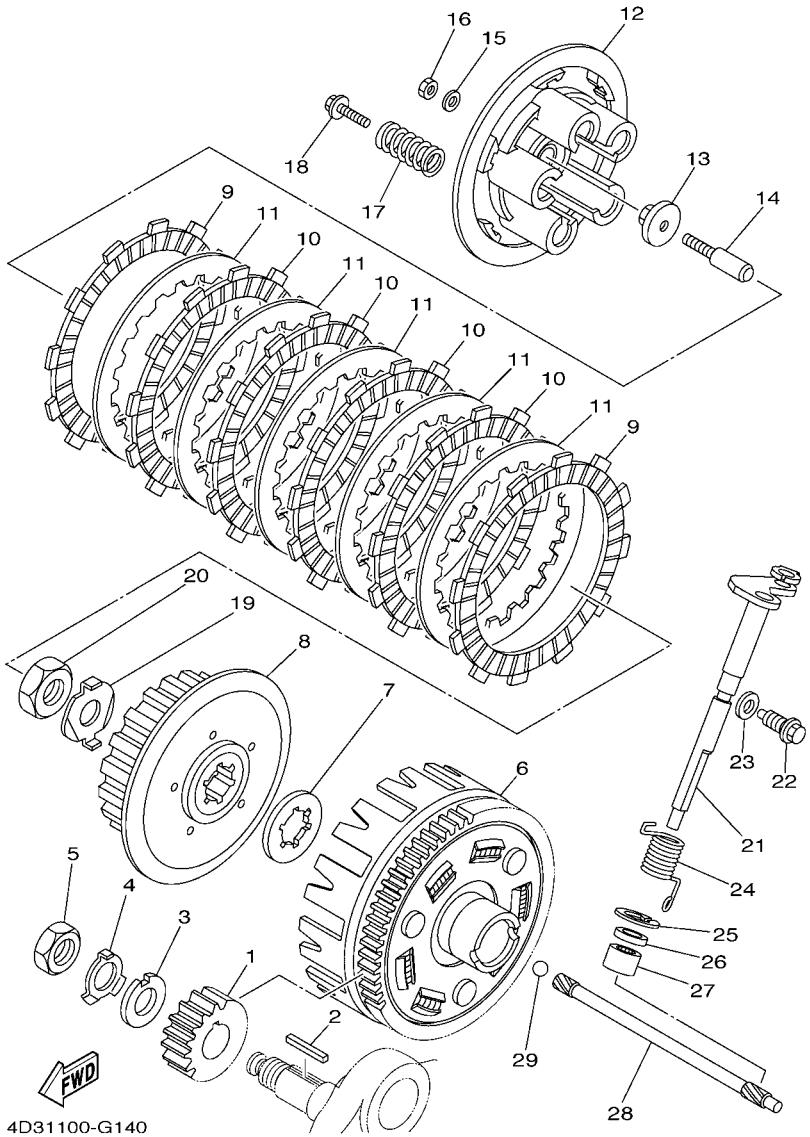

FIG. 14 CLUTCH

REF. NO.	PART NO.	DESCRIPTION	USA	CAN	EUR	OCE	JPN	REMARKS
28	4GY–16357–00	ROD, PUSH 2	1	1	1	1	1	
29	93511–32017	BALL	1	1	1	1	1	

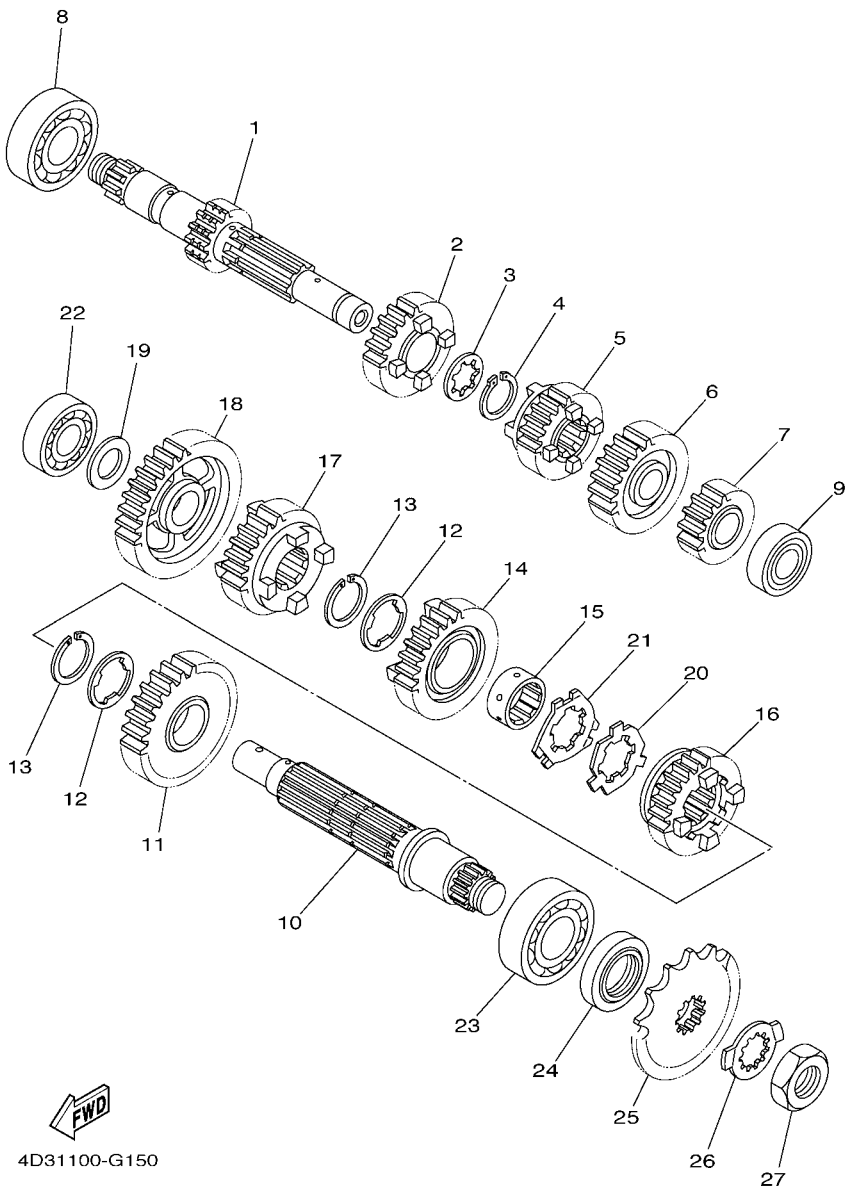

FIG. 15 TRANSMISSION

REF. NO.	PART NO.	DESCRIPTION	USA	CAN	EUR	OCE	JPN	REMARKS
1	4D3–17411–00	AXLE, MAIN	1	1	1	1	1	
2	4D3–17141–00	GEAR, 4TH PINION (24T)	1	1	1	1	1	
3	90209–18208	WASHER	1	1	1	1	1	
4	93410–22039	CIRCLIP	1	1	1	1	1	
5	4D3–17131–00	GEAR, 3RD PINION (21T)	1	1	1	1	1	
6	4D3–17151–00	GEAR, 5TH PINION (29T)	1	1	1	1	1	
7	4D3–17121–00	GEAR, 2ND PINION (18T)	1	1	1	1	1	
8	93306–20427	BEARING	1	1	1	1	1	
9	93306–00320	BEARING	1	1	1	1	1	
10	4D3–17402–00	DRIVE AXLE ASSY	1	1	1	1	1	
11	4D3–17221–00	GEAR, 2ND WHEEL (33T)	1	1	1	1	1	
12	90209–22191	WASHER	2	2	2	2	2	
13	93440–25084	CIRCLIP	2	2	2	2	2	
14	4D3–17231–00	GEAR, 3RD WHEEL (29T)	1	1	1	1	1	
15	90387–22017	COLLAR	1	1	1	1	1	
16	4D3–17251–00	GEAR, 5TH WHEEL (28T)	1	1	1	1	1	
17	4D3–17241–00	GEAR, 4TH WHEEL (24T)	1	1	1	1	1	
18	4D3–17211–00	GEAR, 1ST WHEEL (37T)	1	1	1	1	1	
19	90201–17255	WASHER, PLATE	1	1	1	1	1	
20	90214–22004	WASHER, CLAW	1	1	1	1	1	
21	90214–22005	WASHER, CLAW	1	1	1	1	1	
22	93306–20332	BEARING	1	1	1	1	1	
23	93306–20532	BEARING	1	1	1	1	1	
24	93102–25226	OIL SEAL	1	1	1	1	1	
25	9383R–14236	SPROCKET,DRIVE (22T)	1	1	1	1	1	
26	90215–23265	WASHER, LOCK	1	1	1	1	1	
27	90179–18552	NUT	1	1	1	1	1	

FIG. 16 SHIFT CAM & FORK

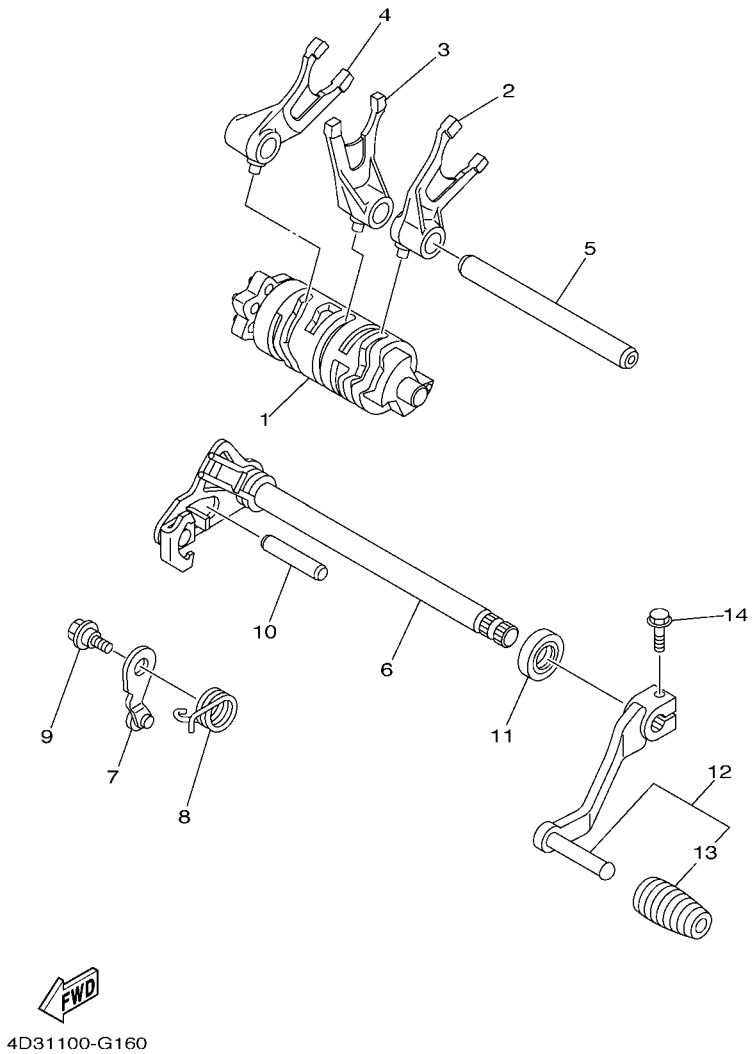

REF. NO.	PART NO.	DESCRIPTION	USA	CAN	EUR	OCE	JPN	REMARKS
1	1S4–18540–00	SHIFT CAM ASSY	1	1	1	1	1	
2	4D3–18511–00	FORK, SHIFT 1	1	1	1	1	1	
3	4D3–18512–00	FORK, SHIFT 2	1	1	1	1	1	
4	4D3–18513–00	FORK, SHIFT 3	1	1	1	1	1	
5	4GY–18531–00	BAR, SHIFT FORK GUIDE 1	1	1	1	1	1	
6	4D3–18101–00	SHIFT SHAFT ASSY	1	1	1	1	1	
7	4TP–18140–00	STOPPER LEVER ASSY	1	1	1	1	1	
8	90508–26020	SPRING, TORSION	1	1	1	1	1	
9	90109–06189	BOLT	1	1	1	1	1	
10	93608–43228	PIN, DOWEL	1	1	1	1	1	
11	93102–14209	OIL SEAL	1	1	1	1	1	
12	4D3–18110–00	SHIFT PEDAL ASSY	1	1	1	1	1	
13	5YT–18113–00	.COVER, SHIFT PEDAL	1	1	1	1	1	
14	95812–06020	BOLT, FLANGE	1	1	1	1	1	

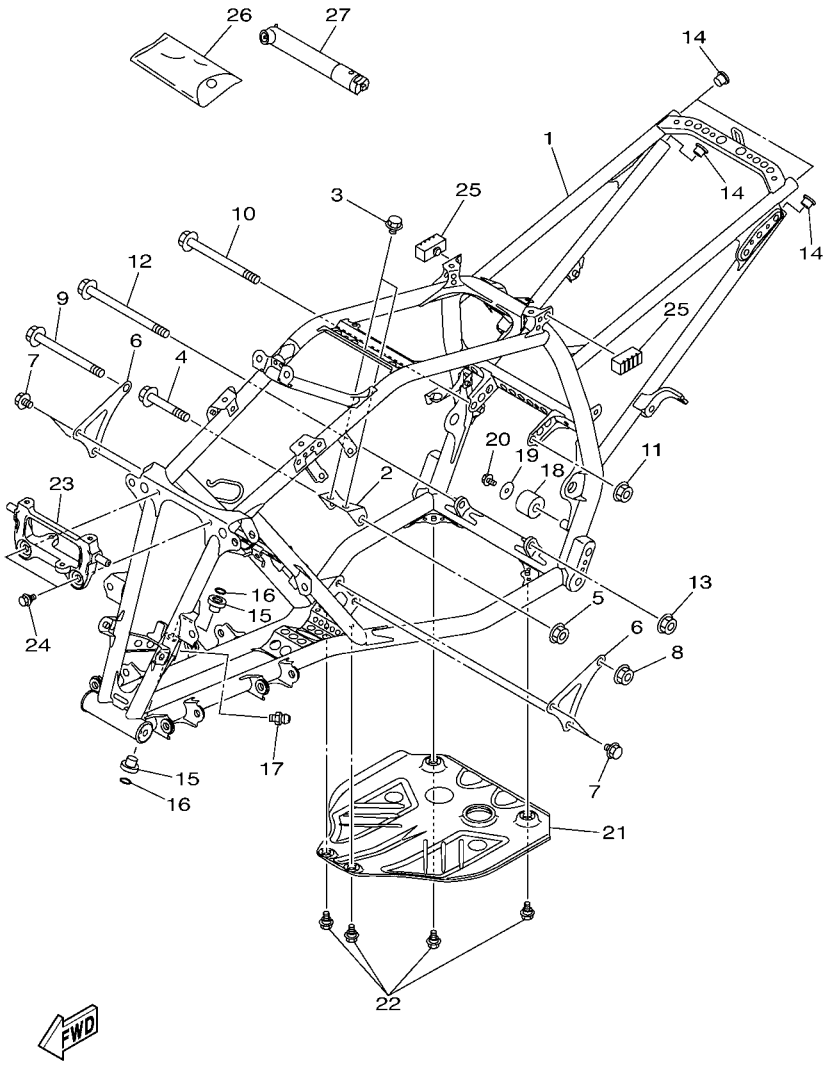

4D31100-G170

FIG. 17 FRAME

REF. NO.	PART NO.	DESCRIPTION	USA	CAN	EUR	OCE	JPN	REMARKS
1	4D3–21110–00–P0	FRAME COMP.	1	1	1	1	1	UR S8 FOR DPBSE
	4D3–21110–00–P1	FRAME COMP.	1	1	1	1		UR VRC7 FOR PGD
2	4D3–21315–00	STAY, ENGINE 2	1	1	1	1	1	
3	95812–08014	BOLT, FLANGE	2	2	2	2	2	
4	90105–10221	BOLT, FLANGE	1	1	1	1	1	
5	95602–10200	NUT, U FLANGE	1	1	1	1	1	
6	4D3–21316–00	STAY, ENGINE 3	2	2	2	2	2	
7	95812–08014	BOLT, FLANGE	4	4	4	4	4	
8	90105–10220	BOLT, FLANGE	1	1	1	1	1	
9	95602–10200	NUT, U FLANGE	1	1	1	1	1	
10	90105–10219	BOLT, FLANGE	1	1	1	1	1	
11	95602–10200	NUT, U FLANGE	1	1	1	1	1	
12	90105–10214	BOLT, FLANGE	1	1	1	1	1	
13	95602–10200	NUT, U FLANGE	1	1	1	1	1	
14	90338–16148	PLUG	4	4	4	4	4	
15	90381–15040	BUSH, SOLID	2	2	2	2	2	
16	93210–15414	O-RING	2	2	2	2	2	
17	93700–06004	NIPPLE, GREASE	1	1	1	1	1	
18	4D3–22178–00	TENSIONER	1	1	1	1	1	
19	90201–08054	WASHER, PLATE	1	1	1	1	1	
20	95822–08012	BOLT, FLANGE	1	1	1	1	1	
21	4D3–21471–00	PROTECTOR, ENGINE	1	1	1	1	1	
22	90109–06172	BOLT	4	4	4	4	4	
23	4D3–2137G–00	STAY 2	1	1	1	1	1	
24	90109–06172	BOLT	2	2	2	2	2	
25	3C3–24741–00	PAD, SEAT	2	2	2	2	2	
26	4D3–28100–00	TOOL KIT	1	1	1	1	1	

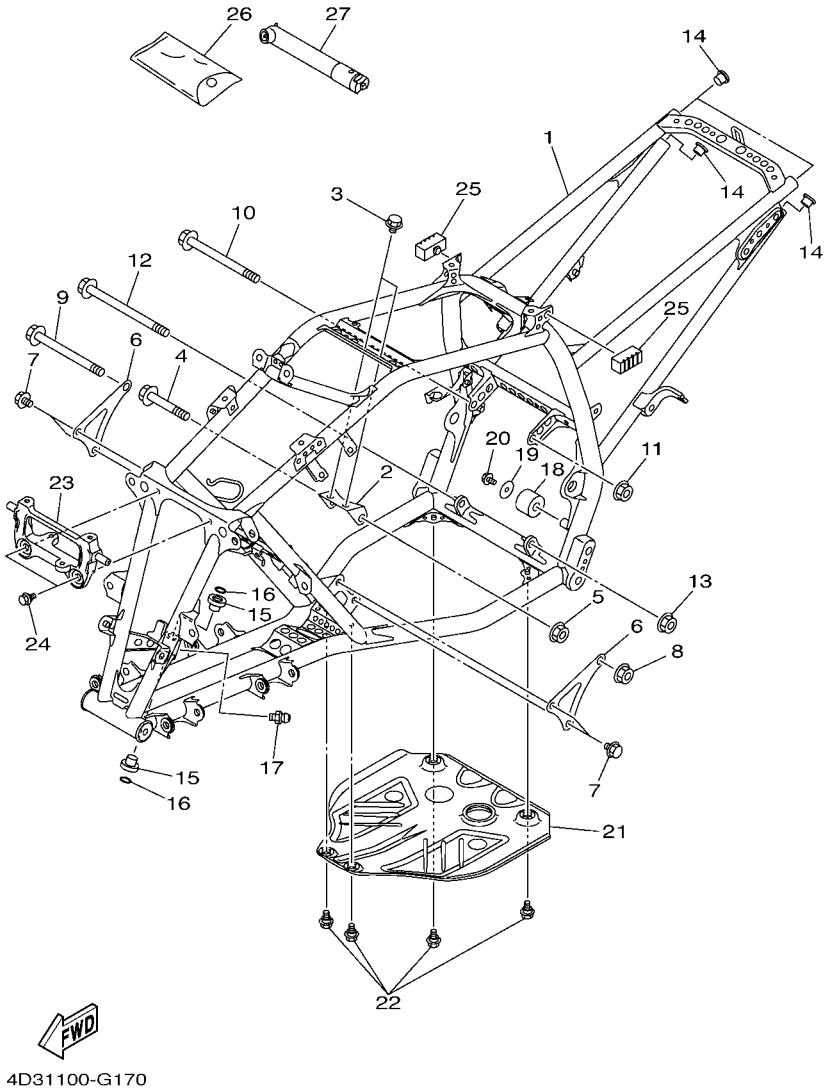

FIG. 17 FRAME

REF. NO.	PART NO.	DESCRIPTION	USA	CAN	EUR	OCE	JPN	REMARKS
27	1NV–2811A–01	GAUGE, AIR	1	1	1	1	1	

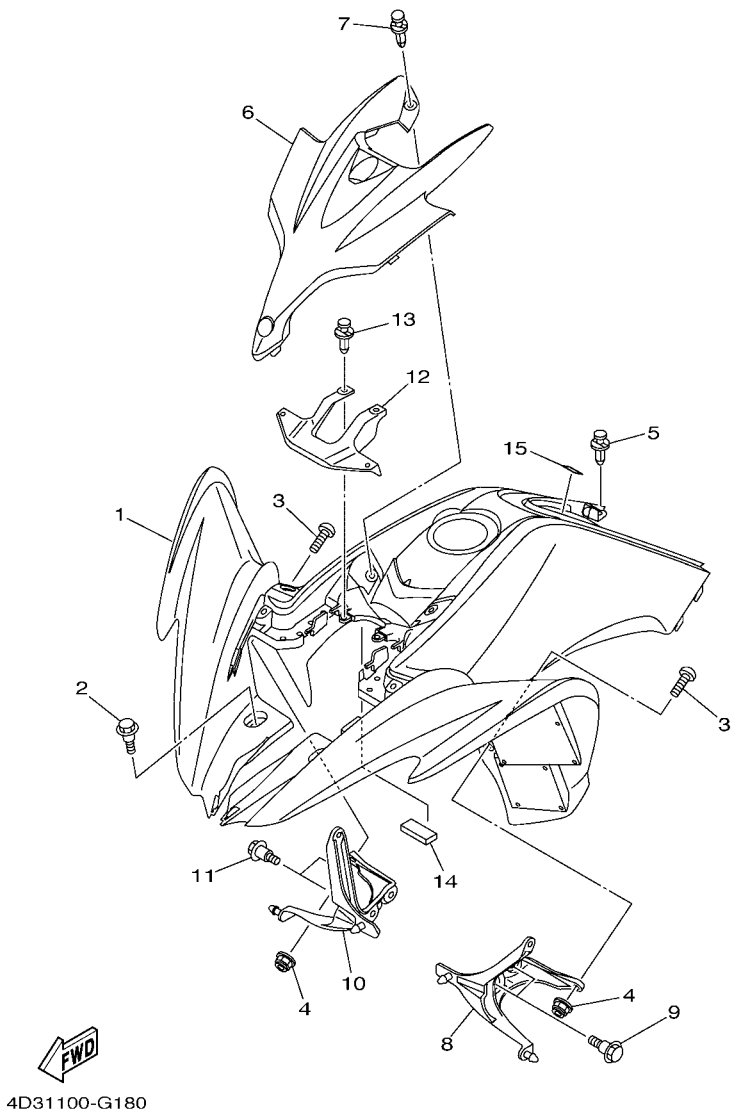

FIG. 18 FRONT FENDER

REF. NO.	PART NO.	DESCRIPTION	USA	CAN	EUR	OCE	JPN	REMARKS
1	4D3–W2151–00	FRONT FENDER COMP.	1					UR FOR DPBSE
	4D3–W2151–10	FRONT FENDER COMP.	1					UR FOR PGD
	4D3–W215C–00	FRONT FENDER COMP.2		1				UR FOR DPBSE
	4D3–W215C–10	FRONT FENDER COMP.2		1				UR FOR PGD
	4D3–W215B–00	FRONT FENDER COMP. 2			1			UR FOR DPBSE
	4D3–W215B–10	FRONT FENDER COMP. 2			1			UR FOR PGD
	4D3–W215D–00	FRONT FENDER COMP. 2				1	1	UR FOR DPBSE
	4D3–W215D–10	FRONT FENDER COMP. 2				1		UR FOR PGD
2	90109–06172	BOLT	2	2	2	2	2	
3	90111–06086	BOLT,HEX. SOCKET BUTTON	2	2	2	2	2	
4	95602–06200	NUT, SELF-LOCKING	2	2	2	2	2	
5	90269–07010	RIVET	2	2	2	2	2	
6	4D3–23391–00	PANEL, FRONT	1	1	1	1	1	UR FOR DPBSE
	4D3–23391–10	PANEL, FRONT	1	1	1	1		UR FOR PGD
7	90269–07010	RIVET	2	2	2	2	2	
8	4D3–21513–00	STAY, FENDER 1	1	1	1	1	1	
9	90109–06214	BOLT	2	2	2	2	2	
10	4D3–21514–00	STAY, FENDER 2	1	1	1	1	1	
11	90109–06214	BOLT	2	2	2	2	2	
12	4D3–21523–00	PLATE 1	1	1	1	1	1	
13	90269–07010	RIVET	4	4	4	4	4	
14	8ET–21747–00	DAMPER	2	2	2	2	2	
15	3MA–27491–00	PROTECTOR	1	1	1	1	1	

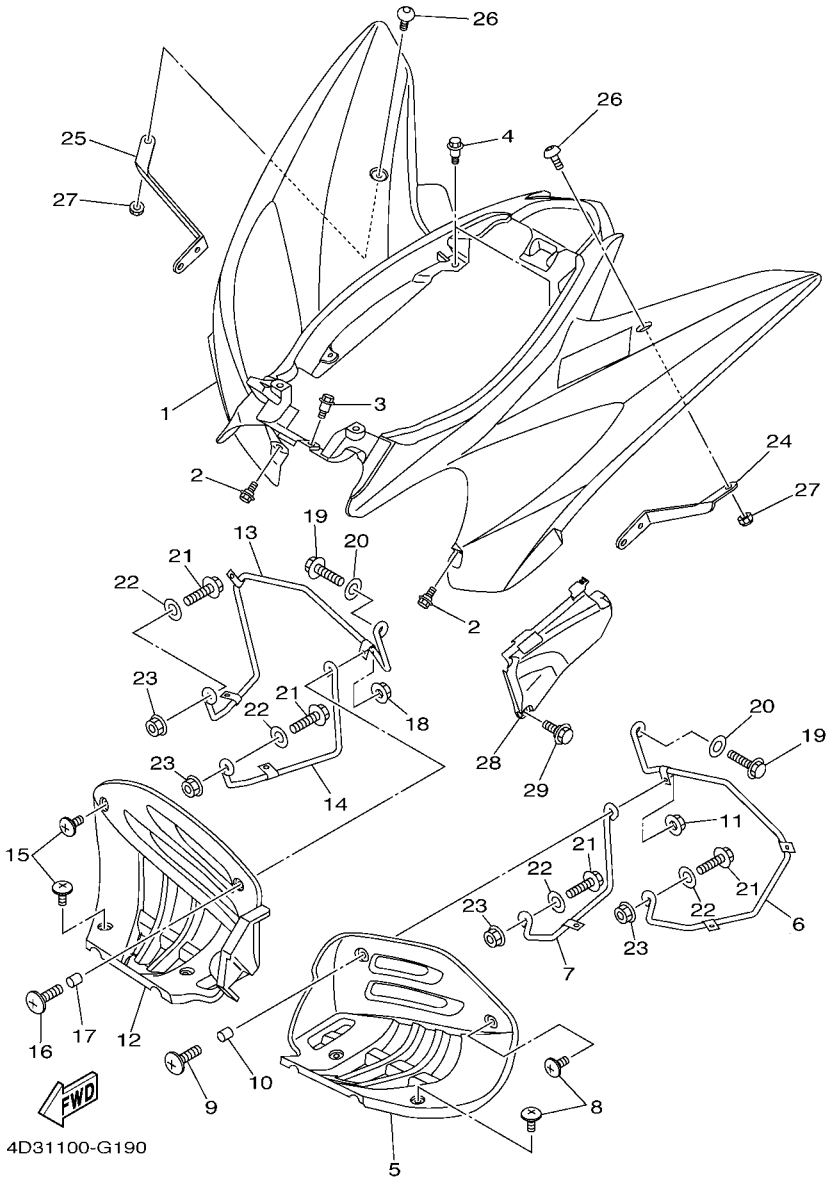

FIG. 19 REAR FENDER

REF. NO.	PART NO.	DESCRIPTION	USA	CAN	EUR	OCE	JPN	REMARKS
1	4D3–W2161–00	REAR FENDER COMP.	1			1	1	UR FOR DPBSE
	4D3–W2161–10	REAR FENDER COMP.	1			1		UR FOR PGD
	4D3–W216C–00	REAR FENDER COMP.2		1				UR FOR DPBSE
	4D3–W216C–10	REAR FENDER COMP.2		1				UR FOR PGD
	4D3–W216B–00	REAR FENDER COMP.2			1			UR FOR DPBSE
	4D3–W216B–10	REAR FENDER COMP.2			1			UR FOR PGD
2	90109–06172	BOLT	2	2	2	2	2	
3	90109–06241	BOLT	1	1	1	1	1	
4	90109–06241	BOLT	2	2	2	2	2	
5	4D3–21621–00	FLAP	1	1	1	1	1	
6	4D3–2164F–00	STAY 1	1	1	1	1	1	
7	4D3–2164H–00	STAY 3	1	1	1	1	1	
8	90154–05013	SCREW, BINDING	3	3	3	3	3	
9	90154–06061	SCREW, BINDING	1	1	1	1	1	
10	90387–062E0	COLLAR	1	1	1	1	1	
11	95602–06200	NUT, SELF-LOCKING	1	1	1	1	1	
12	5LP–21691–00	FLAP	1	1	1	1	1	
13	4D3–2164G–00	STAY 2	1	1	1	1	1	
14	5YT–2164J–10	STAY 4	1	1	1	1	1	
15	90154–05013	SCREW, BINDING	3	3	3	3	3	
16	90154–06061	SCREW, BINDING	1	1	1	1	1	
17	90387–062E0	COLLAR	1	1	1	1	1	
18	95602–06200	NUT, SELF-LOCKING	1	1	1	1	1	
19	95822–08016	BOLT, FLANGE	2	2	2	2	2	
20	90201–08048	WASHER, PLATE	2	2	2	2	2	
21	95822–08025	BOLT, FLANGE	4	4	4	4	4	
22	90201–08048	WASHER, PLATE	4	4	4	4	4	

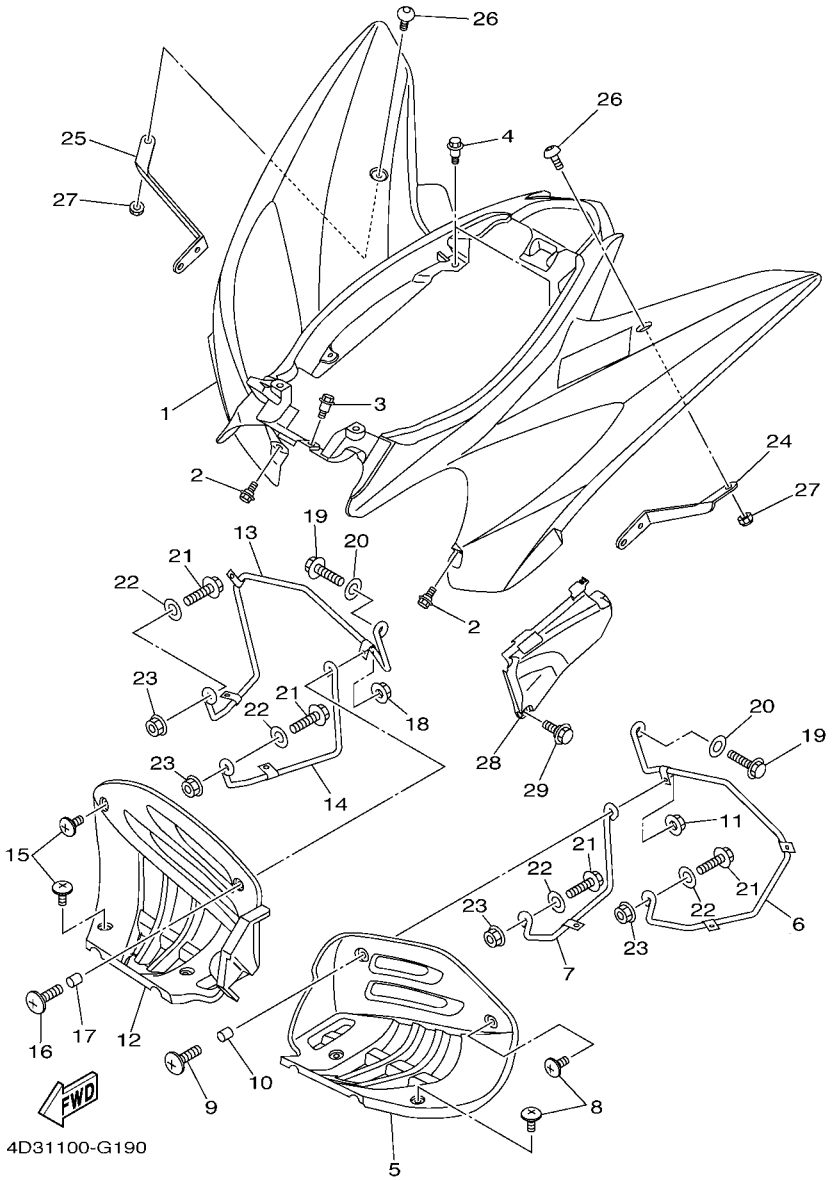

FIG. 19 REAR FENDER

REF. NO.	PART NO.	DESCRIPTION	USA	CAN	EUR	OCE	JPN	REMARKS
23	95602–08200	NUT, SELF-LOCKING	4	4	4	4	4	
24	4D3–21613–00	STAY, FENDER 1	1	1	1	1	1	
25	4D3–21614–00	STAY, FENDER 2	1	1	1	1	1	
26	90110–06200	BOLT, HEXAGON SOCKET HEAD	2	2	2	2	2	
27	95602–06200	NUT, SELF-LOCKING	2	2	2	2	2	
28	4D3–2163A–00	COVER, REAR FENDER 1	1	1	1	1	1	
29	90109–06172	BOLT	1	1	1	1	1	

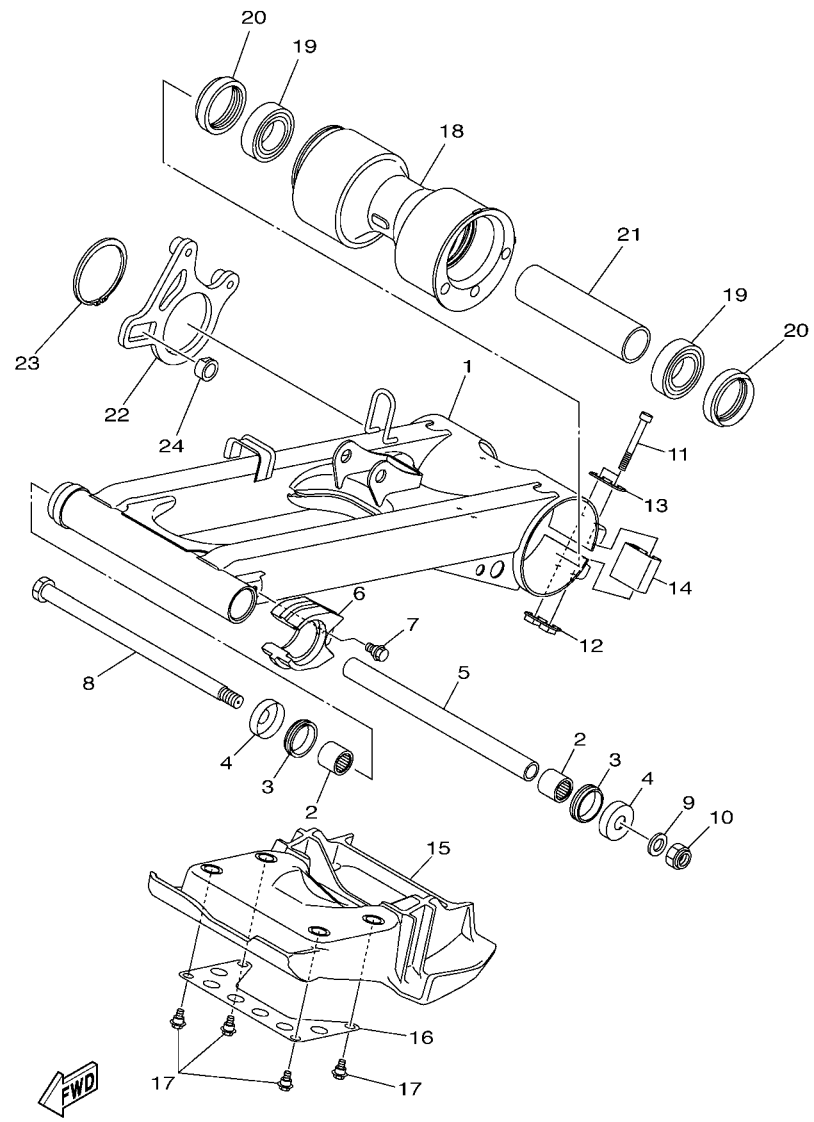

FIG. 20 REAR ARM

REF. NO.	PART NO.	DESCRIPTION	USA	CAN	EUR	OCE	JPN	REMARKS
1	4D3–22110–00–P0	REAR ARM COMP.	1	1	1	1	1	S8
2	93317–22237	BEARING	2	2	2	2	2	
3	93108–35004	OIL SEAL (35-41-8)	2	2	2	2	2	
4	30X–2219X–00	COVER	2	2	2	2	2	
5	4D3–22184–00	BUSH	1	1	1	1	1	
6	4D3–22151–00	SEAL, GUARD	1	1	1	1	1	
7	90109–06172	BOLT	1	1	1	1	1	
8	2JN–22141–00	SHAFT, PIVOT	1	1	1	1	1	
9	90201–14020	WASHER, PLATE	1	1	1	1	1	
10	90185–14009	NUT, SELF-LOCKING	1	1	1	1	1	
11	91312–08060	BOLT	4	4	4	4	4	
12	4D3–22314–00	NUT, PJTN.	2	2	2	2	2	
13	4D3–22348–00	PLATE 2	2	2	2	2	2	
14	4D3–2217H–00	COVER, DUST	2	2	2	2	2	
15	4D3–2219X–00	COVER	1	1	1	1	1	
16	4D3–22347–00	PLATE, CHAIN CASE RUBBER	1	1	1	1	1	
17	90109–06236	BOLT	4	4	4	4	4	
18	4D3–25311–00	HUB, REAR	1	1	1	1	1	
19	93306–00710	BEARING	2	2	2	2	2	
20	93106–46001	OIL SEAL	2	2	2	2	2	
21	4D3–25317–00	SPACER, BEARING	1	1	1	1	1	
22	4D3–25721–00	BRACKET, CALIPER	1	1	1	1	1	
23	93410–67085	CIRCLIP	1	1	1	1	1	
24	4D3–25377–00	COLLAR, WHEEL	1	1	1	1	1	

FIG. 21 REAR SUSPENSION

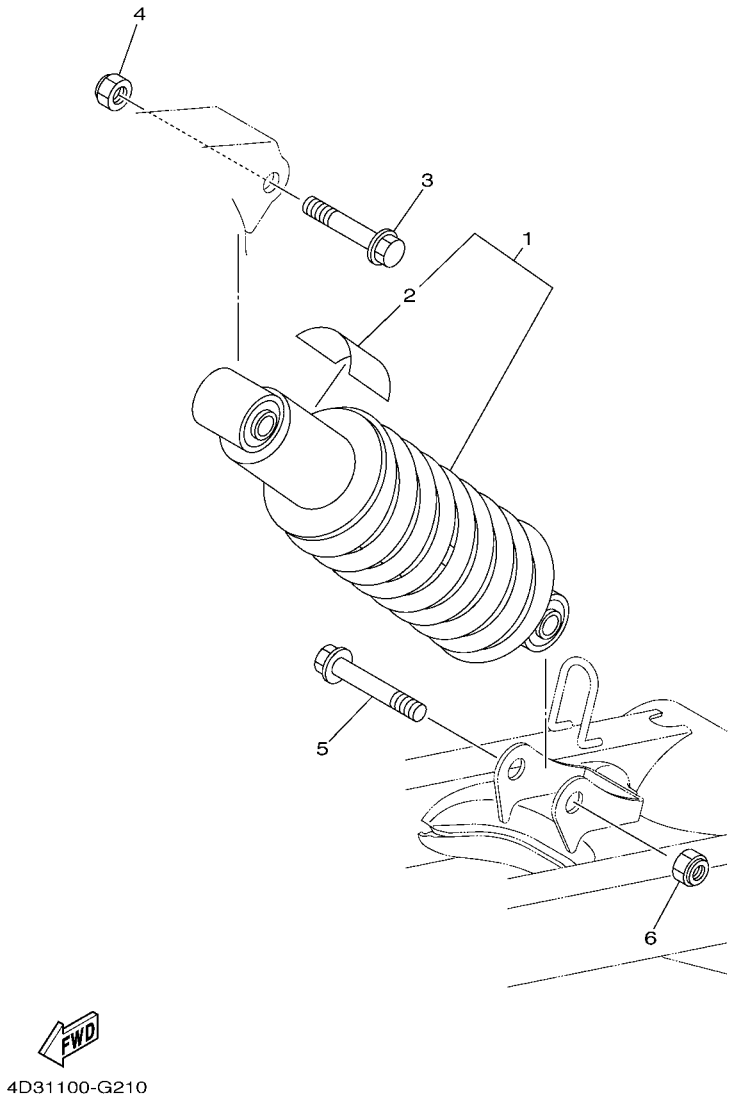

REF. NO.	PART NO.	DESCRIPTION	USA	CAN	EUR	OCE	JPN	REMARKS
1	4D3–22210–00–36	SHOCK ABSORBER ASSY, REAR	1					UR WW FOR DPBSE
	4D3–22210–00–35	SHOCK ABSORBER ASSY, REAR	1					UR SL FOR PGD
	4D3–22210–10–36	SHOCK ABSORBER ASSY, REAR		1				UR WW FOR DPBSE
	4D3–22210–10–35	SHOCK ABSORBER ASSY, REAR		1				UR SL FOR PGD
	4D3–22210–20–36	SHOCK ABSORBER ASSY, REAR			1	1		UR WW FOR DPBSE
	4D3–22210–20–35	SHOCK ABSORBER ASSY, REAR			1	1		UR SL FOR PGD
	4D3–22210–30–36	SHOCK ABSORBER ASSY, REAR					1	WW FOR DPBSE
2	4AA–22259–80	.LABEL, WARNING	1					
	4AA–22259–70	.LABEL, WARNING		1				
	4AA–22259–40	.LABEL, WARNING			1	1		
	3YK–22259–00	.LABEL, WARNING					1	
3	90105–12051	BOLT, FLANGE	1	1	1	1	1	
4	95612–12100	NUT, U	1	1	1	1	1	
5	90105–12051	BOLT, FLANGE	1	1	1	1	1	
6	95612–12100	NUT, U	1	1	1	1	1	

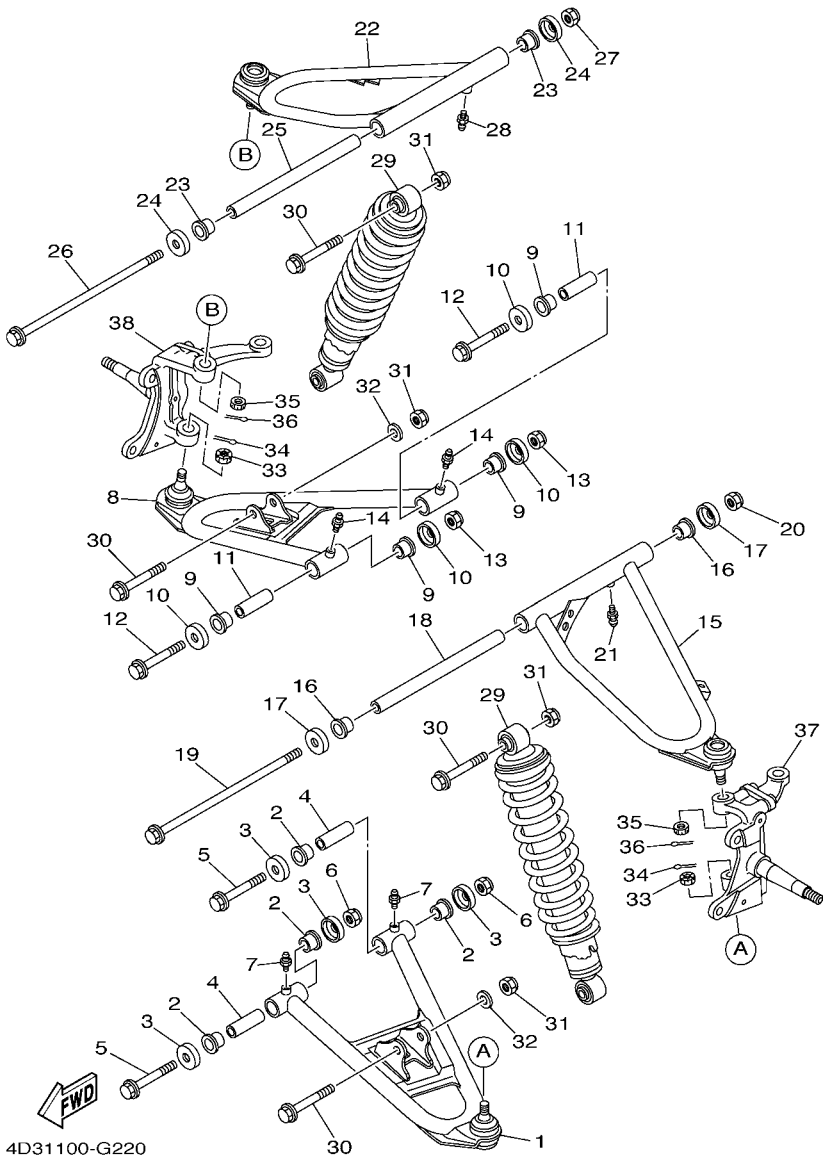

FIG. 22 FRONT SUSPENSION & WHEEL

REF. NO.	PART NO.	DESCRIPTION	USA	CAN	EUR	OCE	JPN	REMARKS
1	4D3–23570–00–P0	FRONT LOWER ARM COMP. (LEFT)	1	1	1	1	1	S8
2	90381–15088	BUSH, SOLID	4	4	4	4	4	
3	5YT–23517–00	COVER, THRUST 1	4	4	4	4	4	
4	90387–101R3	COLLAR	2	2	2	2	2	
5	90105–10241	BOLT, FLANGE	2	2	2	2	2	
6	90185–10012	NUT, SELF-LOCKING	2	2	2	2	2	
7	93700–06004	NIPPLE, GREASE	2	2	2	2	2	
8	4D3–23580–00–P0	FRONT LOWER ARM COMP. (RIGHT)	1	1	1	1	1	S8
9	90381–15088	BUSH, SOLID	4	4	4	4	4	
10	5YT–23517–00	COVER, THRUST 1	4	4	4	4	4	
11	90387–101R3	COLLAR	2	2	2	2	2	
12	90105–10241	BOLT, FLANGE	2	2	2	2	2	
13	90185–10012	NUT, SELF-LOCKING	2	2	2	2	2	
14	93700–06004	NIPPLE, GREASE	2	2	2	2	2	
15	4D3–23540–00–P0	FRONT UPPER ARM COMP. (LEFT)	1	1	1	1	1	S8
16	90381–15088	BUSH, SOLID	2	2	2	2	2	
17	5YT–23517–00	COVER, THRUST 1	2	2	2	2	2	
18	90387–100Y6	COLLAR	1	1	1	1	1	
19	109–22141–01	SHAFT, PIVOT	1	1	1	1	1	
20	90185–10012	NUT, SELF-LOCKING	1	1	1	1	1	
21	93700–06004	NIPPLE, GREASE	1	1	1	1	1	
22	4D3–23550–00–P0	FRONT UPPER ARM COMP. (RIGHT)	1	1	1	1	1	S8
23	90381–15088	BUSH, SOLID	2	2	2	2	2	
24	5YT–23517–00	COVER, THRUST 1	2	2	2	2	2	
25	90387–100Y6	COLLAR	1	1	1	1	1	
26	109–22141–01	SHAFT, PIVOT	1	1	1	1	1	
27	90185–10012	NUT, SELF-LOCKING	1	1	1	1	1	

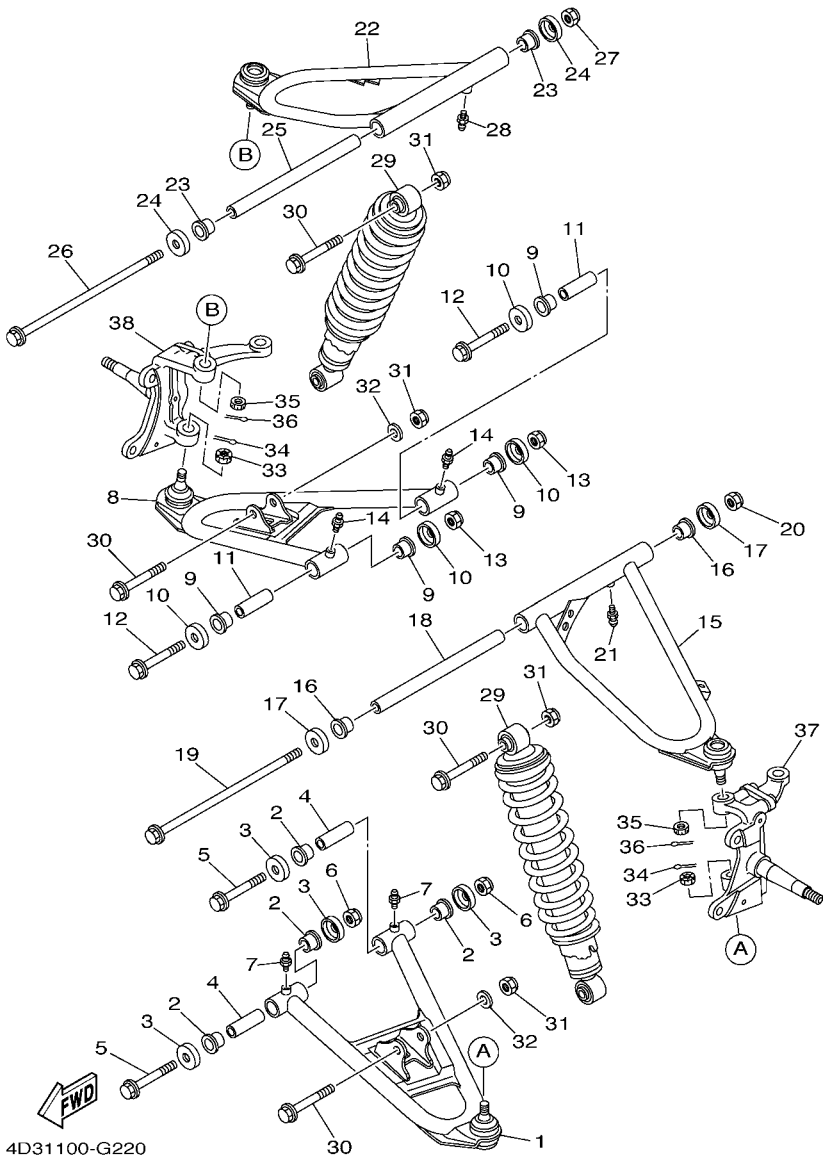

FIG. 22 FRONT SUSPENSION & WHEEL

REF. NO.	PART NO.	DESCRIPTION	USA	CAN	EUR	OCE	JPN	REMARKS
28	93700–06004	NIPPLE, GREASE	1	1	1	1	1	
29	4D3–23350–10	SHOCK ABSORBER ASSY	2	2	2	2	2	UR FOR DPBSE
	4D3–23350–00	SHOCK ABSORBER ASSY	2	2	2	2		UR FOR PGD
30	90105–10131	BOLT, FLANGE	4	4	4	4	4	
31	90185–10012	NUT, SELF-LOCKING	4	4	4	4	4	
32	90201–10035	WASHER, PLATE	2	2	2	2	2	
33	90171–10001	NUT, CASTLE	2	2	2	2	2	
34	91401–20020	PIN, COTTER	2	2	2	2	2	
35	90171–10001	NUT, CASTLE	2	2	2	2	2	
36	91401–20020	PIN, COTTER	2	2	2	2	2	
37	3GD–23501–10	STEERING KNUCKLE ASSY (LEFT)	1	1	1	1	1	
38	3GD–23502–10	STEERING KNUCKLE ASSY (RIGHT)	1	1	1	1	1	

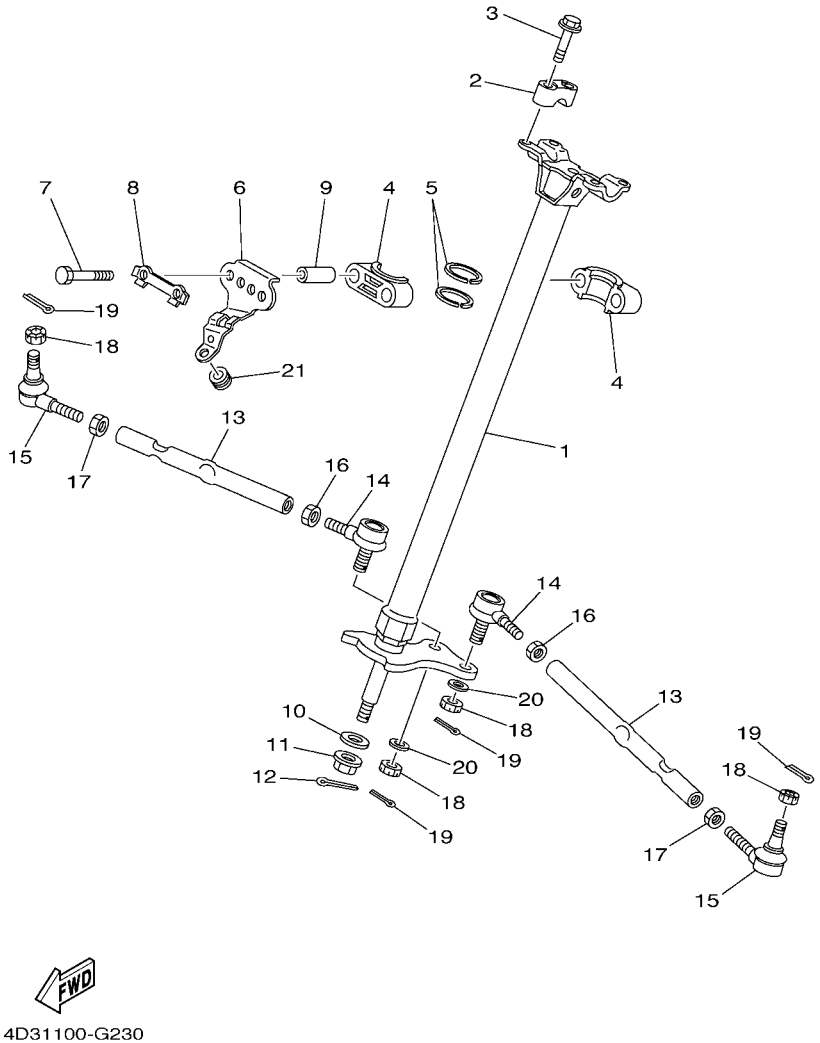

FIG. 23 STEERING

REF. NO.	PART NO.	DESCRIPTION	USA	CAN	EUR	OCE	JPN	REMARKS
1	4D3–23813–00	COLUMN, STEERING 2	1	1	1	1	1	
2	8K1–23814–00	HOLDER, HANDLE	2	2	2	2	2	
3	95822–08030	BOLT, FLANGE	4	4	4	4	4	
4	1UY–23812–00	PLANE BEARING, STEERING	2	2	2	2	2	
5	93112–31011	OIL SEAL	2	2	2	2	2	
6	4D3–23868–00	BRACKET, STEERING LOWER	1	1	1	1	1	
7	97022–08055	BOLT	2	2	2	2	2	
8	1UY–23894–01	WASHER, LOCK 1	1	1	1	1	1	
9	90387–090R0	COLLAR	2	2	2	2	2	
10	90201–10036	WASHER, PLATE	1	1	1	1	1	
11	90185–10019	NUT, SELF-LOCKING	1	1	1	1	1	
12	91401–20020	PIN, COTTER	1	1	1	1	1	
13	4D3–23831–00	ROD, TIE	2	2	2	2	2	
14	1UY–23841–01	JOINT, UNIVERSAL 1	2	2	2	2	2	
15	1UY–23845–01	JOINT, UNIVERSAL 2	2	2	2	2	2	
16	95302–10700	NUT	2	2	2	2	2	
17	90170–10010	NUT	2	2	2	2	2	(L.H. THREAD)
18	90171–10001	NUT, CASTLE	4	4	4	4	4	
19	91401–20020	PIN, COTTER	4	4	4	4	4	
20	90209–10229	WASHER	2	2	2	2	2	
21	90480–15235	GROMMET	1	1	1	1	1	

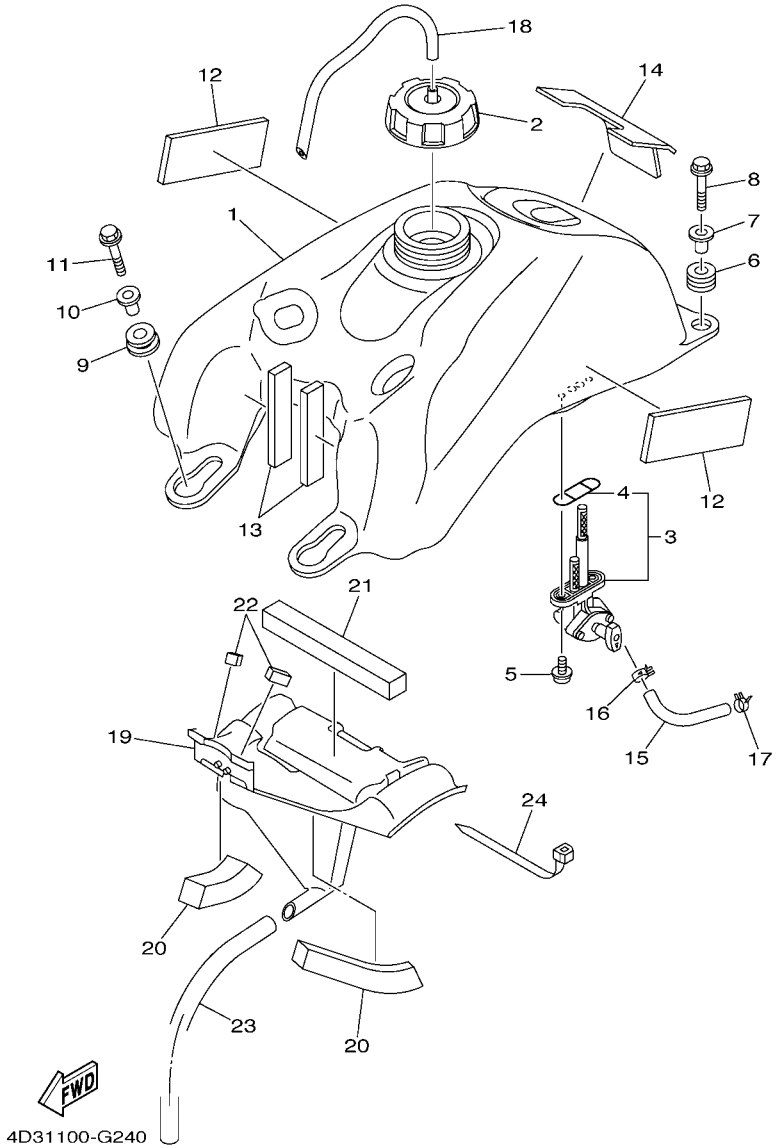

FIG. 24 FUEL TANK

REF. NO.	PART NO.	DESCRIPTION	USA	CAN	EUR	OCE	JPN	REMARKS
1	4D3–24110–10	FUEL TANK COMP.	1	1				
	4D3–24110–00	FUEL TANK COMP.			1	1	1	
2	5KM–24610–00	CAP ASSY	1	1	1	1	1	
3	4D3–24500–00	FUEL COCK ASSY 1	1	1	1	1	1	
4	1P6–24512–00	.GASKET	1	1	1	1	1	
5	90149–06108	SCREW	2	2	2	2	2	
6	90480–18290	GROMMET	2	2	2	2	2	
7	90387–066J1	COLLAR	2	2	2	2	2	
8	95802–06025	BOLT, FLANGE	2	2	2	2	2	
9	90480–18004	GROMMET	2	2	2	2	2	
10	90387–066J1	COLLAR	2	2	2	2	2	
11	95802–06025	BOLT, FLANGE	2	2	2	2	2	
12	5TG–21541–00	DAMPER 1	2	2	2	2	2	
13	4D3–24181–00	DAMPER, LOCATING 1	2	2	2	2	2	
14	4D3–21541–00	DAMPER 1	1	1	1	1	1	
15	90445–11050	HOSE (L105)	1	1				
	90445–11049	HOSE (L105)			1	1	1	
16	90467–09037	CLIP	1	1	1	1	1	
17	90467–100A2	CLIP	1	1	1	1	1	
18	90445–08376	HOSE (L330)	1	1	1	1	1	
19	4D3–2414H–00	DAMPER, PLATE 1	1	1	1	1	1	
20	4D3–24182–00	DAMPER, LOCATING 2	2	2	2	2	2	
21	4D3–24183–00	DAMPER, LOCATING 3	1	1	1	1	1	
22	4D3–24184–00	DAMPER, LOCATING 4	2	2	2	2	2	
23	90445–16007	HOSE (L400)	1	1	1	1	1	
24	90464–15195	CLAMP	1	1	1	1	1	

FIG. 25 SEAT

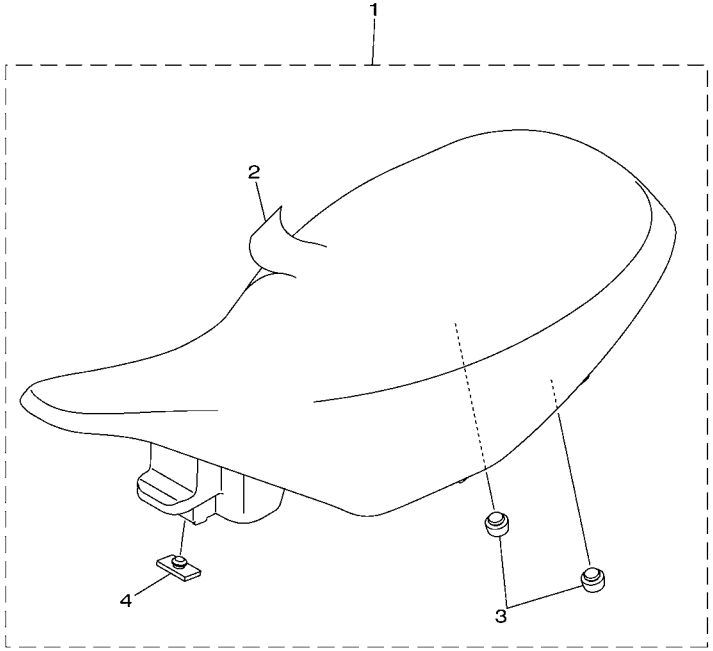

4D31100-G250

REF. NO.	PART NO.	DESCRIPTION	USA	CAN	EUR	OCE	JPN	REMARKS
1	4D3–24710–00	SINGLE SEAT ASSY	1	1		1	1	
	4D3–24710–10	SINGLE SEAT ASSY			1			
2	4D3–2470F–00	.SEAT COVER COMP.	1	1		1	1	
	4D3–2470F–10	.SEAT COVER COMP.			1			
3	157–27114–00	.STOPPER, MAIN STAND	2	2	2	2	2	
4	509–24724–00	.DAMPER, SEAT	1	1	1	1	1	

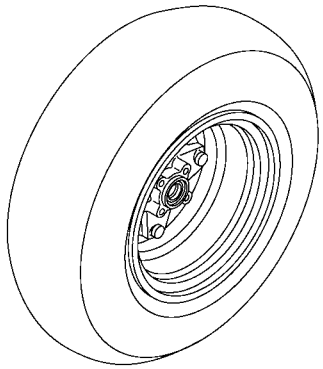

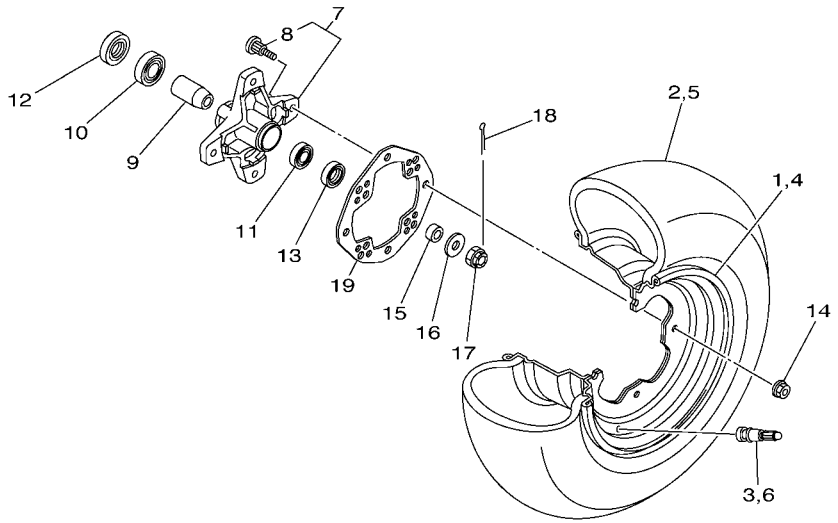

4D31100-G260

FIG. 26 FRONT WHEEL

REF. NO.	PART NO.	DESCRIPTION	USA	CAN	EUR	OCE	JPN	REMARKS
1	5LP–25180–20	WHEEL COMP.	1	1	1	1	1	
2	94107–10024	TIRE (AT20X7-10** KT201 T/L N)	1	1	1	1	1	DUNLOP
3	93900–00022	VALVE, RIM (TR413)	1	1	1	1	1	TAIHEIYO
4	5LP–25180–20	WHEEL COMP.	1	1	1	1	1	
5	94107–10024	TIRE (AT20X7-10** KT201 T/L N)	1	1	1	1	1	DUNLOP
6	93900–00022	VALVE, RIM (TR413)	1	1	1	1	1	TAIHEIYO
7	3GD–25111–20	HUB, FRONT	2	2	2	2	2	
8	90114–10006	.BOLT, SERRATION	4	4	4	4	4	
9	1UY–25117–00	SPACER, BEARING	2	2	2	2	2	
10	93306–00446	BEARING	2	2	2	2	2	
11	93306–20231	BEARING	2	2	2	2	2	
12	93105–26026	OIL SEAL	2	2	2	2	2	
13	93102–22216	OIL SEAL	2	2	2	2	2	
14	95702–10500	NUT, WITH WASHER	8	8	8	8	8	
15	90387–150R1	COLLAR	2	2	2	2	2	
16	90201–14586	WASHER, PLATE	2	2	2	2	2	
17	90171–14002	NUT, CASTLE	2	2	2	2	2	
18	91401–30025	PIN, SPLIT	2	2	2	2	2	
19	1S3–25127–00	COVER, PLATE	2	2	2	2	2	

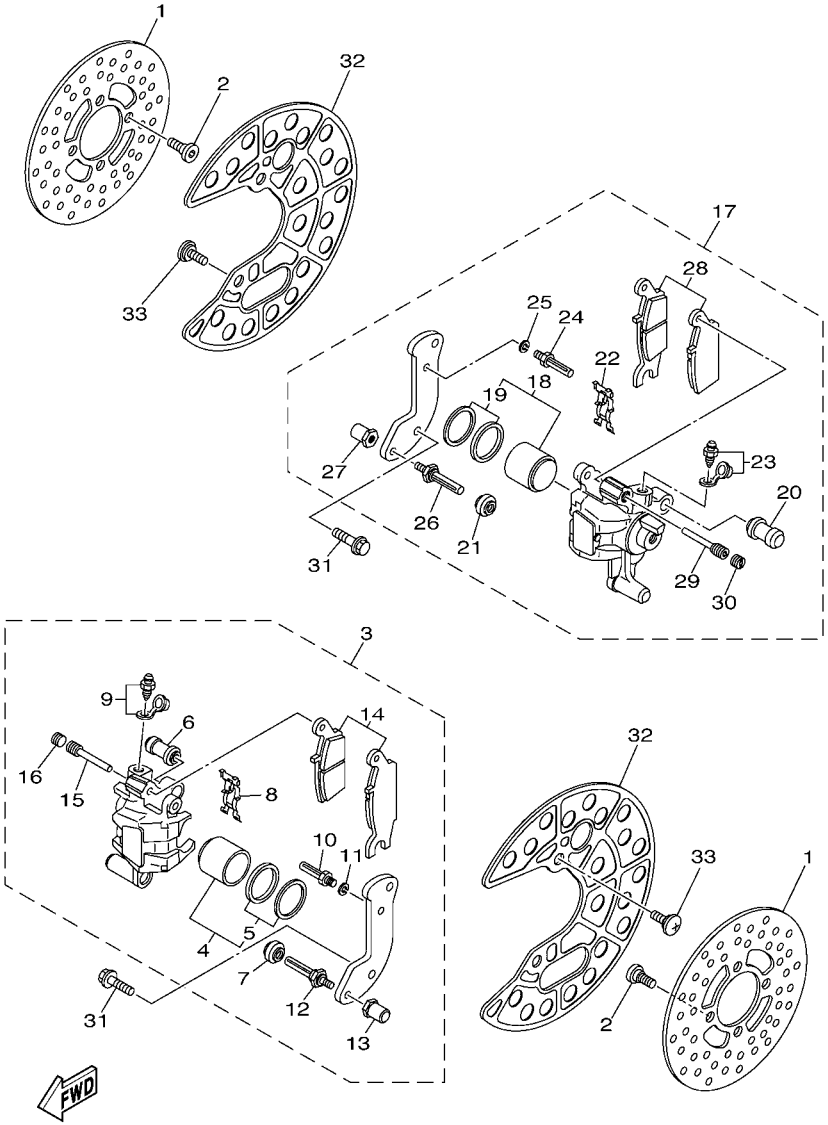

FIG. 27 FRONT BRAKE CALIPER

REF. NO.	PART NO.	DESCRIPTION	USA	CAN	EUR	OCE	JPN	REMARKS
1	3GD–2582T–10	DISC, BRAKE (LEFT)	2	2	2	2	2	
2	90109–08082	BOLT	8	8	8	8	8	
3	4D3–2580T–00	CALIPER ASSY (LEFT)	1	1	1	1	1	
4	3B4–W0057–00	.PISTON ASSY, CALIPER	1	1	1	1	1	
5	3B4–W0047–00	..CALIPER SEAL KIT	1	1	1	1	1	
6	1UY–25937–51	.BOOT 2	1	1	1	1	1	
7	3JD–25917–00	.BOOT, CALIPER	1	1	1	1	1	
8	5DH–25919–00	.SUPPORT, PAD	1	1	1	1	1	
9	1UY–W0048–50	.BLEED SCREW KIT	1	1	1	1	1	
10	1UY–25926–51	.BOLT	1	1	1	1	1	
11	1UY–25938–51	.WASHER, SPRING	1	1	1	1	1	
12	3JD–25926–00	.BOLT	1	1	1	1	1	
13	3JD–25961–00	.NUT	1	1	1	1	1	
14	4D3–W0045–00	.BRAKE PAD KIT	1	1	1	1	1	
15	5DH–25933–00	.PIN, PAD	1	1	1	1	1	
16	8CR–25926–00	.BOLT	1	1	1	1	1	
17	4D3–2580U–00	CALIPER ASSY (RIGHT)	1	1	1	1	1	
18	3B4–W0057–00	.PISTON ASSY, CALIPER	1	1	1	1	1	
19	3B4–W0047–00	..CALIPER SEAL KIT	1	1	1	1	1	
20	1UY–25937–51	.BOOT 2	1	1	1	1	1	
21	3JD–25917–00	.BOOT, CALIPER	1	1	1	1	1	
22	5DH–25919–00	.SUPPORT, PAD	1	1	1	1	1	
23	1UY–W0048–50	.BLEED SCREW KIT	1	1	1	1	1	
24	1UY–25926–51	.BOLT	1	1	1	1	1	
25	1UY–25938–51	.WASHER, SPRING	1	1	1	1	1	
26	3JD–25926–00	.BOLT	1	1	1	1	1	
27	3JD–25961–00	.NUT	1	1	1	1	1	

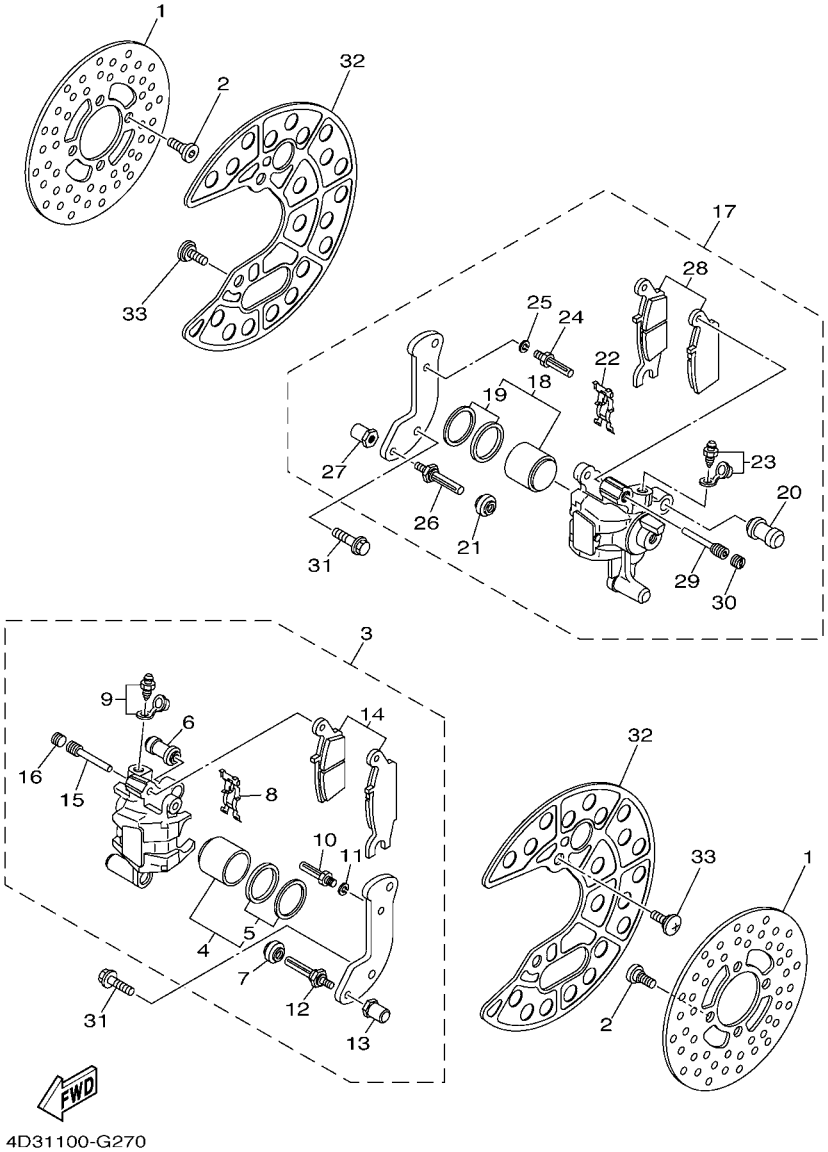

FIG. 27 FRONT BRAKE CALIPER

REF. NO.	PART NO.	DESCRIPTION	USA	CAN	EUR	OCE	JPN	REMARKS
28	4D3–W0045–10	.BRAKE PAD KIT	1	1	1	1	1	
29	5DH–25933–00	.PIN, PAD	1	1	1	1	1	
30	8CR–25926–00	.BOLT	1	1	1	1	1	
31	90105–08161	BOLT, FLANGE	4	4	4	4	4	
32	4D3–2514A–00	RING, WHEEL 1	2	2	2	2	2	
33	90154–06014	SCREW, BINDING	4	4	4	4	4	

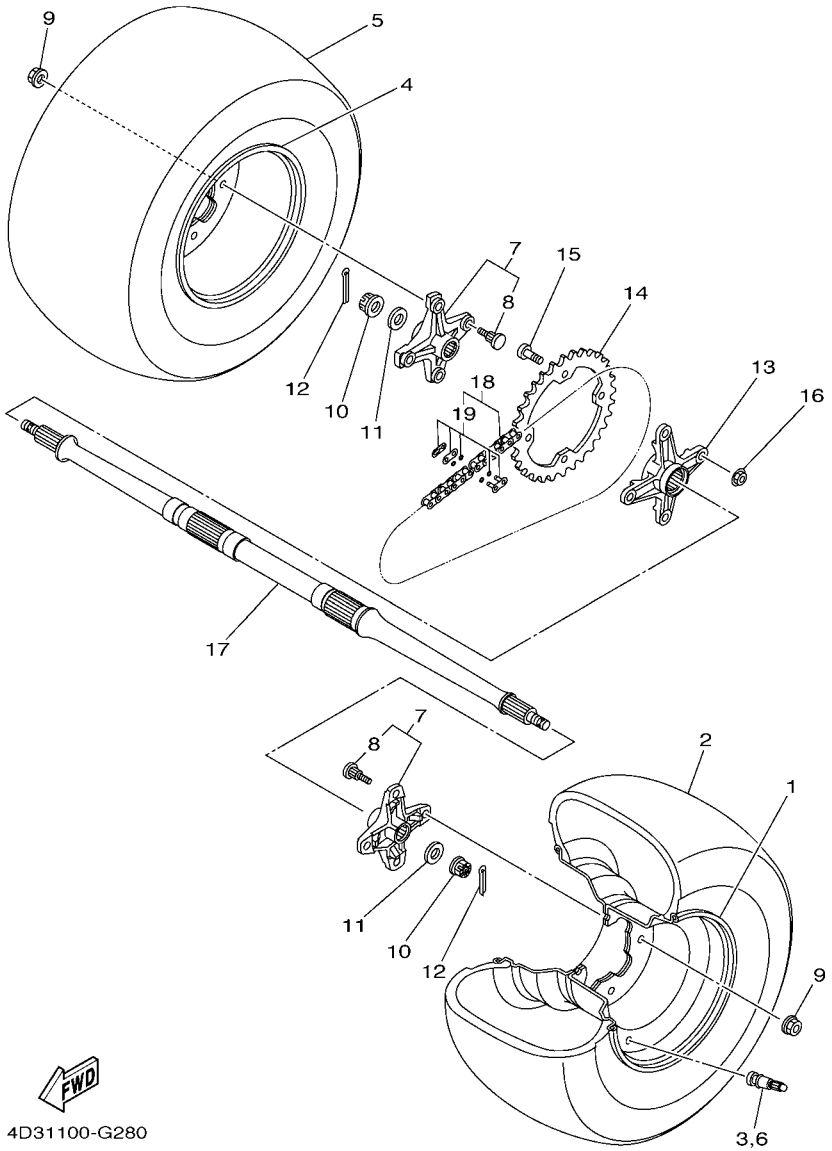

FIG. 28 REAR WHEEL

REF. NO.	PART NO.	DESCRIPTION	USA	CAN	EUR	OCE	JPN	REMARKS
1	4D3–25390–00	REAR WHEEL COMP.	1	1	1	1	1	
2	94110–09024	TIRE (AT19X10-9** KT205 T/L N)	1	1	1	1	1	DUNLOP
3	93900–00022	VALVE, RIM (TR413)	1	1	1	1	1	TAIHEIYO
4	4D3–25390–00	REAR WHEEL COMP.	1	1	1	1	1	
5	94110–09024	TIRE (AT19X10-9** KT205 T/L N)	1	1	1	1	1	DUNLOP
6	93900–00022	VALVE, RIM (TR413)	1	1	1	1	1	TAIHEIYO
7	1S3–25383–20	COLLAR, WHEEL	2	2	2	2	2	
8	90114–10013	.BOLT, SERRATION	4	4	4	4	4	
9	95702–10500	NUT, WITH WASHER	8	8	8	8	8	
10	90171–14004	NUT, CASTLE	2	2	2	2	2	
11	90201–14021	WASHER, PLATE	2	2	2	2	2	
12	91401–30030	PIN, COTTER	2	2	2	2	2	
13	5YT–25386–00	COLLAR, SPROCKET AXLE	1	1	1	1	1	
14	5TG–25438–10	SPROCKET, DRIVEN (38T)	1	1	1	1	1	
15	90109–10010	BOLT	4	4	4	4	4	
16	95602–10200	NUT, U FLANGE	4	4	4	4	4	
17	4D3–25381–00	AXLE, WHEEL	1	1	1	1	1	
18	94581–87092	CHAIN (DID520V)	1	1	1	1	1	
19	94681–87011	.JOINT, CHAIN (DID520V FJ)	1	1	1	1	1	

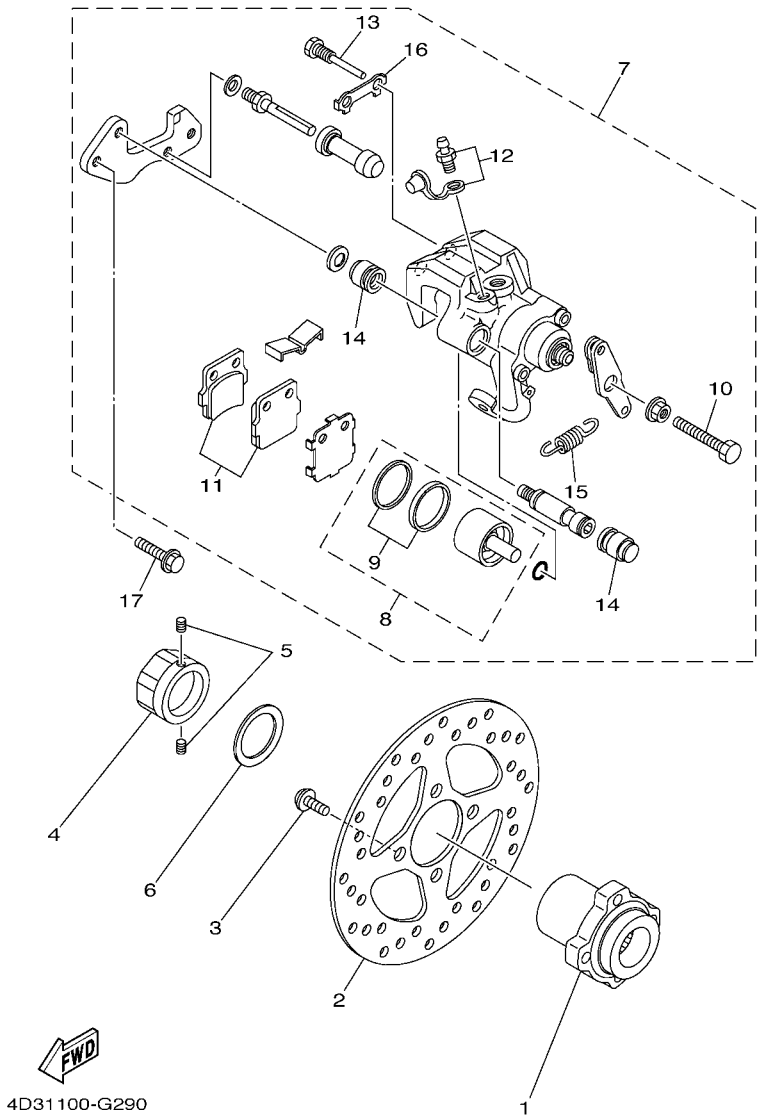

FIG. 29 REAR BRAKE CALIPER

REF. NO.	PART NO.	DESCRIPTION	USA	CAN	EUR	OCE	JPN	REMARKS
1	5YT–25712–00	BRACKET, DISC	1	1	1	1	1	
2	4D3–2582W–00	DISK, REAR BRAKE 2	1	1	1	1	1	
3	90109–081F0	BOLT	4	4	4	4	4	
4	90170–33010	NUT	1	1	1	1	1	
5	90113–06055	BOLT, SET	2	2	2	2	2	
6	90208–34001	WASHER, CONICAL SPRING	1	1	1	1	1	
7	5YT–2580W–10	CALIPER ASSY, REAR 2	1	1	1	1	1	
8	5LP–W0057–50	.PISTON ASSY, CALIPER	1	1	1	1	1	
9	5LP–W0047–50	..CALIPER SEAL KIT	1	1	1	1	1	
10	1UY–25972–51	.ADJUSTBOLT	1	1	1	1	1	
11	4D3–W0046–50	.BRAKE PAD KIT 2	1	1	1	1	1	
12	1UY–W0048–50	.BLEED SCREW KIT	1	1	1	1	1	
13	1UY–25924–51	.PIN, PAD	2	2	2	2	2	
14	1UY–25917–51	.BOOT, CALIPER	2	2	2	2	2	
15	5YT–25977–50	.SPRING, RETURN	1	1	1	1	1	
16	1UY–25933–51	.WASHER, PAD PIN	1	1	1	1	1	
17	90105–08183	BOLT, FLANGE	2	2	2	2	2	

FIG. 30 STEERING HANDLE & CABLE

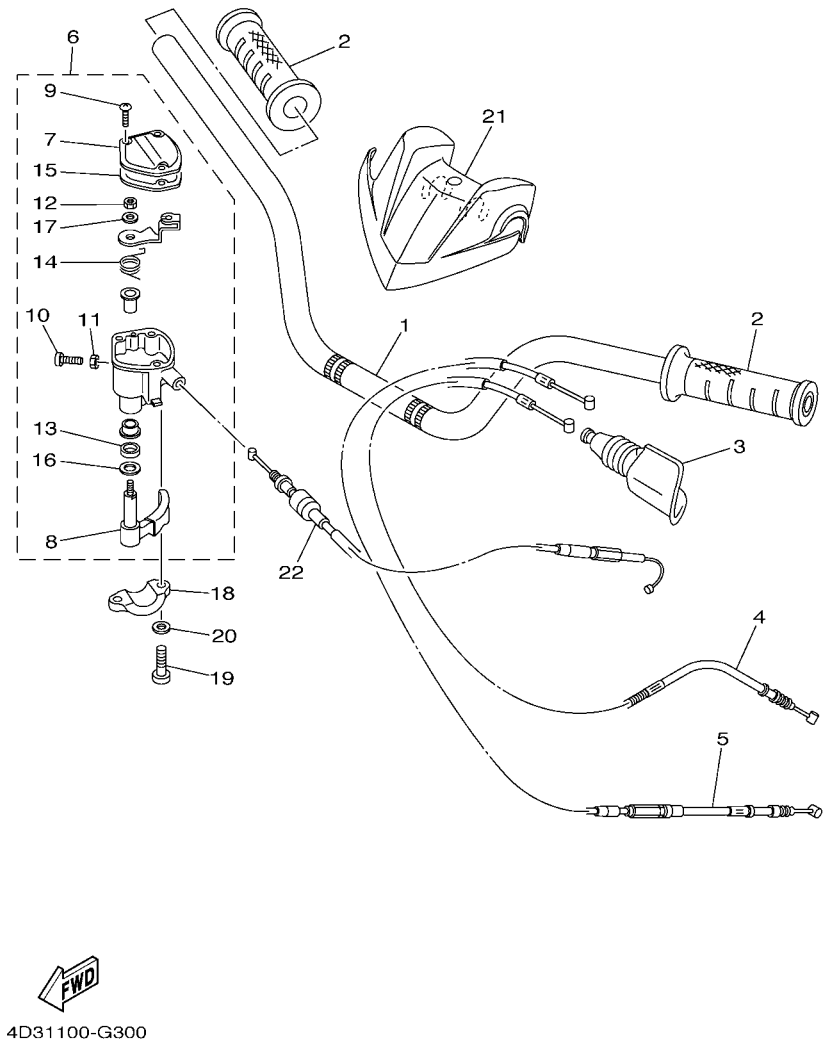

REF. NO.	PART NO.	DESCRIPTION	USA	CAN	EUR	OCE	JPN	REMARKS
1	4D3–26111–00	HANDLEBAR	1	1	1	1	1	
2	5LP–26241–00	GRIP	2	2	2	2	2	
3	31A–26372–00	COVER, HANDLE LEVER 1	1	1	1	1	1	
4	4D3–26335–00	CABLE, CLUTCH	1	1	1	1	1	
5	4D3–26341–00	WIRE, BRAKE 1	1	1	1	1	1	
6	4KB–26250–20	THROTTLE LEVER ASSY	1	1	1	1	1	
7	4KB–2628F–20	.CAP, GEAR	1	1	1	1	1	
8	1NV–2625G–01	.LEVER, THROTTLE	1	1	1	1	1	
9	4KB–2632G–00	.SCREW	3	3	3	3	3	
10	4KB–26256–00	.SCREW, GRIP END	1	1	1	1	1	
11	95607–05100	.NUT, U	1	1	1	1	1	
12	4KB–26258–00	.NUT, LOCK	1	1	1	1	1	
13	93104–09025	.OIL SEAL	1	1	1	1	1	
14	1NV–26304–00	.SPRING	1	1	1	1	1	
15	4KB–2628G–00	.GASKET	1	1	1	1	1	
16	1NV–26129–00	.WASHER	1	1	1	1	1	
17	1NV–26398–00	.WASHER	1	1	1	1	1	
18	4V4–82913–00	HOLDER, LEVER LOWER 1	1	1	1	1	1	
19	98502–05020	SCREW, PAN HEAD	2	2	2	2	2	
20	92902–05600	WASHER, PLATE	2	2	2	2	2	
21	4D3–26124–00	PROTECTOR, HANDLEBAR	1	1	1	1	1	
22	4D3–26311–00	CABLE, THROTTLE 1	1	1	1	1	1	

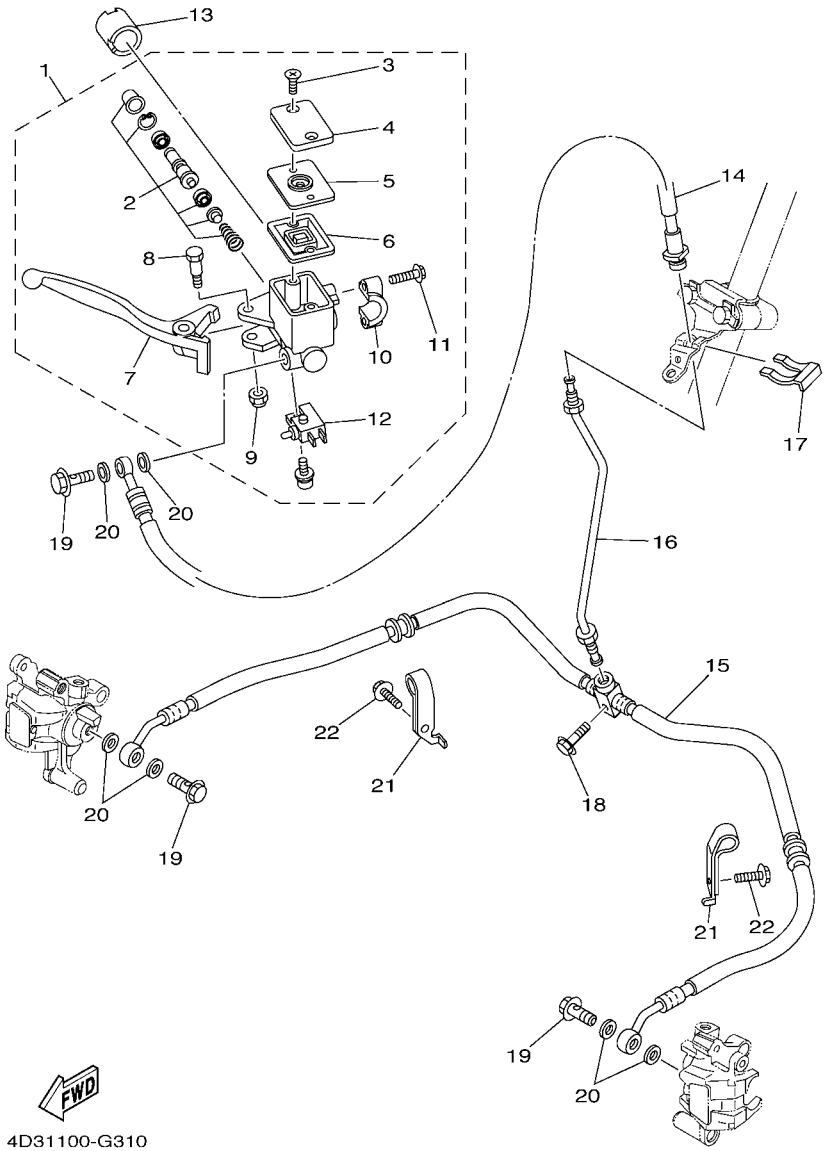

FIG. 31 FRONT MASTER CYLINDER

REF. NO.	PART NO.	DESCRIPTION	USA	CAN	EUR	OCE	JPN	REMARKS
1	4D3–2583T–00	MASTER CYLINDER ASSY	1	1	1	1	1	
2	5D3–W0041–00	.CYLINDER KIT, MASTER	1	1	1	1	1	
3	4NK–2589H–00	.SCREW	2	2	2	2	2	
4	5YU–25852–00	.CAP, RESERVOIR	1	1	1	1	1	
5	3B4–2585B–00	.PLATE, DIAPHRAGM	1	1	1	1	1	
6	4TT–25854–00	.DIAPHRAGM, RESERVOIR	1	1	1	1	1	
7	4D3–83922–00	.LEVER 2	1	1	1	1	1	
8	3B4–2589F–00	.BOLT, LEVER	1	1	1	1	1	
9	95604–06100	.NUT, U	1	1	1	1	1	
10	5MV–25867–00	.BRACKET, MASTER CYLINDER	1	1	1	1	1	
11	5MV–25833–00	.BOLT, FITTING	2	2	2	2	2	
12	5D3–83980–00	.FRONT STOP SWITCH ASSY	1	1	1	1	1	
13	1UY–26259–00	COLLAR	1	1	1	1	1	
14	4D3–25872–00	HOSE, BRAKE 1	1	1	1	1	1	
15	4D3–25873–00	HOSE, BRAKE 2	1	1	1	1	1	
16	4D3–25871–00	PIPE, BRAKE	1	1	1	1	1	
17	2GU–25866–00	CIRCLIP	1	1	1	1	1	
18	95822–06025	BOLT, FLANGE	1	1	1	1	1	
19	90401–10015	BOLT, UNION	3	3	3	3	3	
20	90201–10118	WASHER, PLATE	6	6	6	6	6	
21	4D3–25886–00	HOLDER, BRAKE HOSE	2	2	2	2	2	
22	95802–06016	BOLT, FLANGE	2	2	2	2	2	

FIG. 32 STAND & FOOTREST

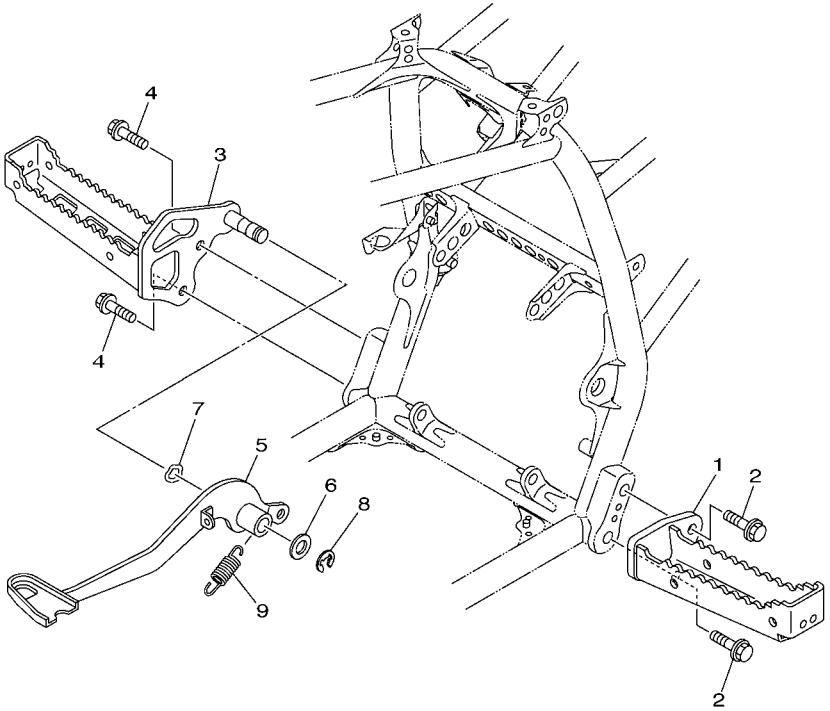

REF. NO.	PART NO.	DESCRIPTION	USA	CAN	EUR	OCE	JPN	REMARKS
1	4D3–27411–00	FOOTREST 1	1	1	1	1	1	
2	95812–10020	BOLT, FLANGE	2	2	2	2	2	
3	4D3–27421–00	FOOTREST 2	1	1	1	1	1	
4	95812–10020	BOLT, FLANGE	2	2	2	2	2	
5	4D3–27211–00	PEDAL, BRAKE	1	1	1	1	1	
6	90201–15018	WASHER, PLATE	1	1	1	1	1	
7	90206–15021	WASHER, WAVE	1	1	1	1	1	
8	93430–12008	CIRCLIP	1	1	1	1	1	
9	90506–20026	SPRING, TENSION	1	1	1	1	1	

FIG. 33 REAR MASTER CYLINDER

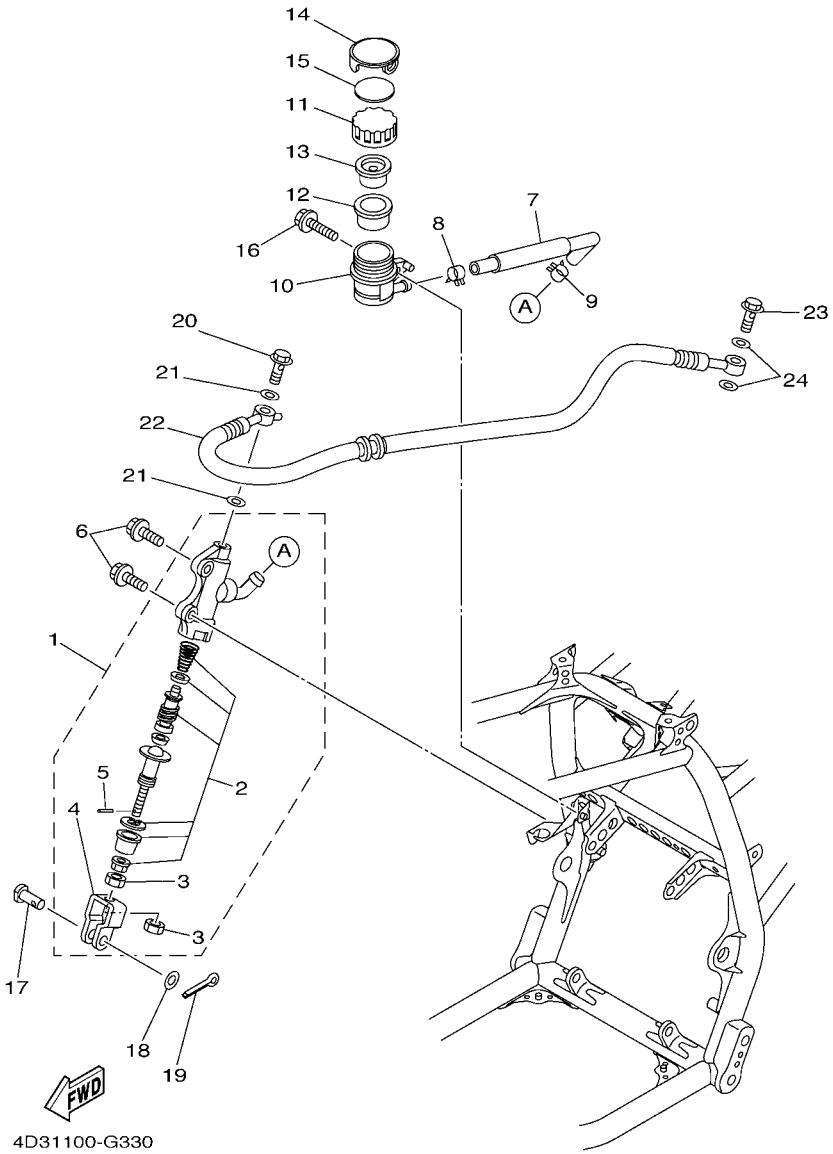

REF. NO.	PART NO.	DESCRIPTION	USA	CAN	EUR	OCE	JPN	REMARKS
1	5TG–2580E–20	REAR MASTER CYLINDER ASSY	1	1	1	1	1	
2	5TG–W0042–50	.CYLINDER KIT, MASTER	1	1	1	1	1	
3	4SS–27218–00	.NUT	2	2	2	2	2	
4	2YK–27222–00	.JOINT	1	1	1	1	1	
5	3KW–27234–00	.PIN, BRAKE ROD	1	1	1	1	1	
6	95022–08025	BOLT, FLANGE	2	2	2	2	2	
7	4D3–25895–00	HOSE, RESERVOIR	1	1	1	1	1	
8	90467–11044	CLIP	1	1	1	1	1	
9	90467–11044	CLIP	1	1	1	1	1	
10	5TG–25894–00	TANK, RESERVOIR	1	1	1	1	1	
11	3XP–25852–50	CAP, RESERVOIR	1	1	1	1	1	
12	2VN–25854–00	DIAPHRAGM, RESERVOIR	1	1	1	1	1	
13	2VN–25855–00	BUSH,DIAPHRAGM	1	1	1	1	1	
14	4D3–25888–00	COVER, RESERVOIR TANK	1	1	1	1	1	
15	4D3–27491–00	PROTECTOR	1	1	1	1	1	
16	90109–06240	BOLT	1	1	1	1	1	
17	90240–08005	PIN, CLEVIS	1	1	1	1	1	
18	90201–08066	WASHER, PLATE	1	1	1	1	1	
19	91401–16012	PIN, COTTER	1	1	1	1	1	
20	90401–10015	BOLT, UNION	1	1	1	1	1	
21	90201–10118	WASHER, PLATE	2	2	2	2	2	
22	4D3–25874–00	HOSE, BRAKE	1	1	1	1	1	
23	90401–10015	BOLT, UNION	1	1	1	1	1	
24	90201–10118	WASHER, PLATE	2	2	2	2	2	

FIG. 34 GUARD

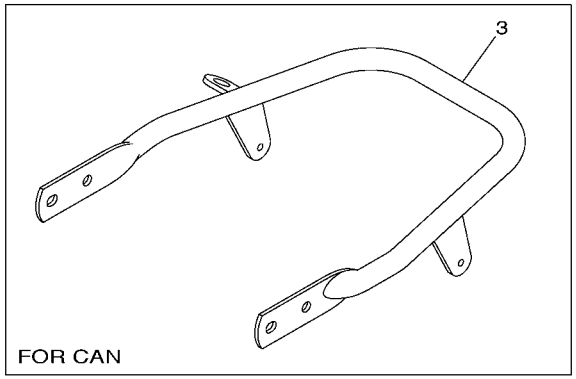

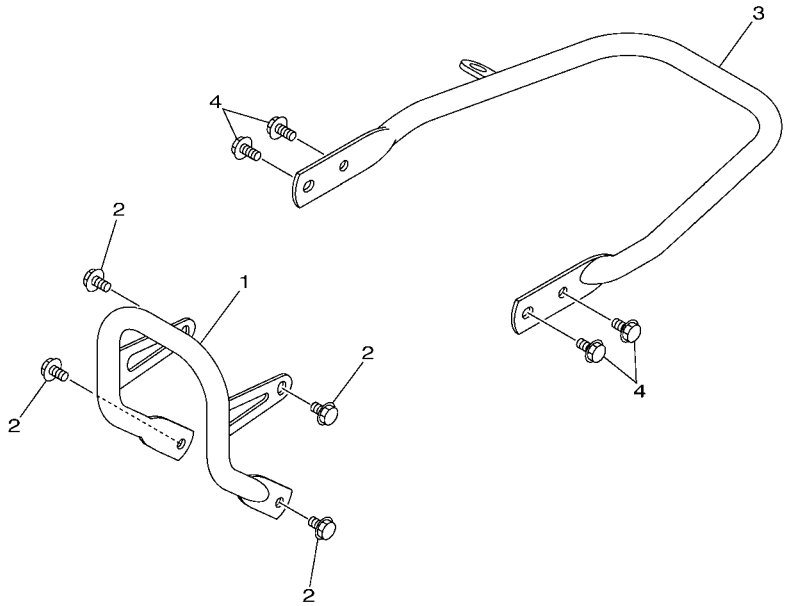

4D31100-G340

REF. NO.	PART NO.	DESCRIPTION	USA	CAN	EUR	OCE	JPN	REMARKS
1	4D3–2845N–00–R4	BAR, CARRY FRONT	1	1	1	1	1	HPB
2	95812–08012	BOLT, FLANGE	4	4	4	4	4	
3	4D3–2845R–00–R4	BAR, CARRY REAR	1		1	1	1	HPB
	4D3–2845R–10–R4	BAR, CARRY REAR		1				HPB
4	95812–08014	BOLT, FLANGE	4	4	4	4	4	

FIG. 35 GENERATOR

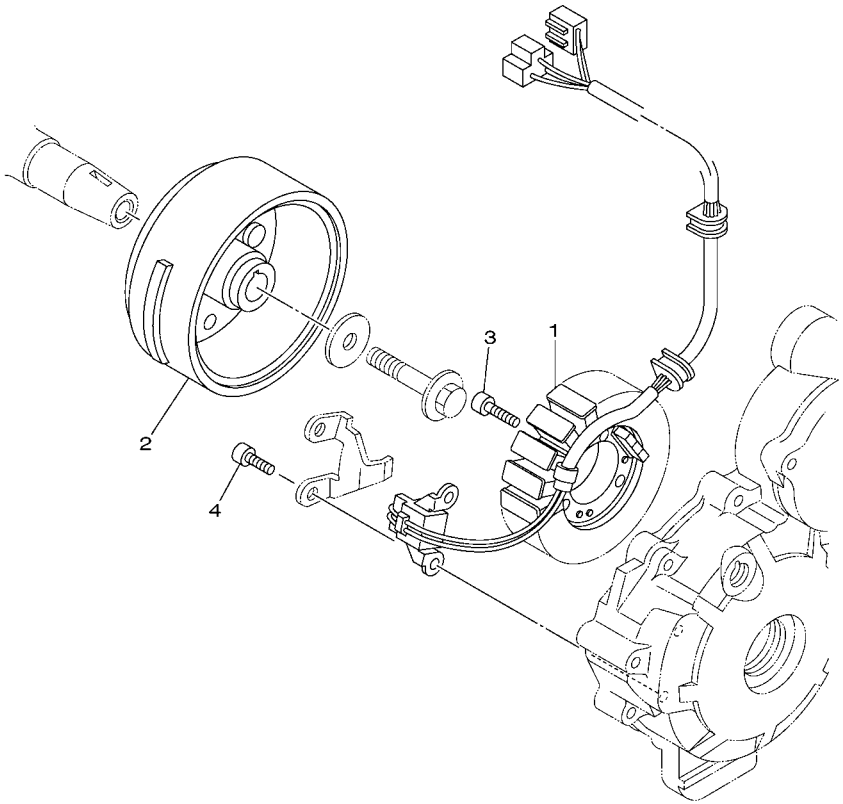

4D31100-G350

REF. NO.	PART NO.	DESCRIPTION	USA	CAN	EUR	OCE	JPN	REMARKS
1	4D3–81410–00	STATOR ASSY	1	1	1	1	1	
2	5XT–81450–01	ROTOR ASSY	1	1	1	1	1	
3	90110–06169	BOLT, HEXAGON SOCKET HEAD	3	3	3	3	3	
4	90110–06161	BOLT, HEXAGON SOCKET HEAD	2	2	2	2	2	

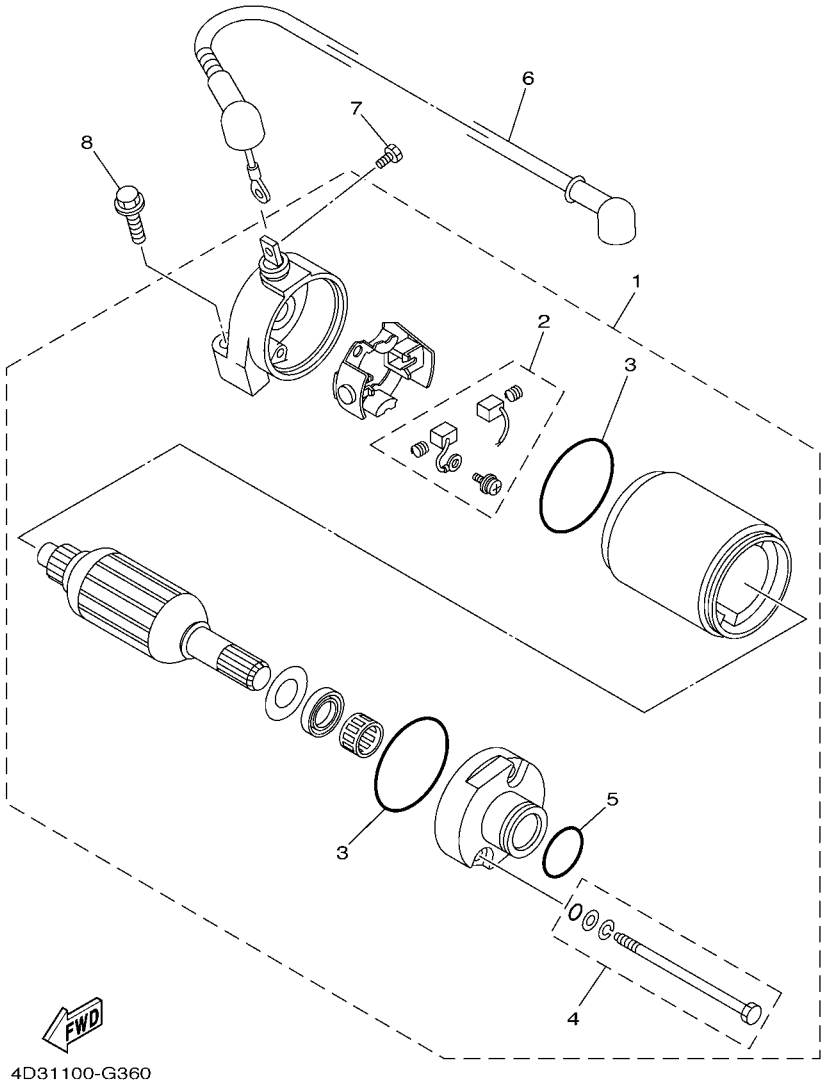

FIG. 36 STARTING MOTOR

REF. NO.	PART NO.	DESCRIPTION	USA	CAN	EUR	OCE	JPN	REMARKS
1	3C5–81890–00	MOTOR ASSY	1	1	1	1	1	
2	3C5–81801–00	.BRUSH SET	1	1	1	1	1	
3	5HP–8182M–00	.O-RING	2	2	2	2	2	
4	5HP–81828–00	.BOLT 2	1	1	1	1	1	
5	93210–25711	.O-RING	1	1	1	1	1	
6	4D3–8183G–00	CORD COMP.	1	1	1	1	1	
7	5TJ–81828–01	BOLT 2	1	1	1	1	1	
8	90105–06125	BOLT, FLANGE	2	2	2	2	2	

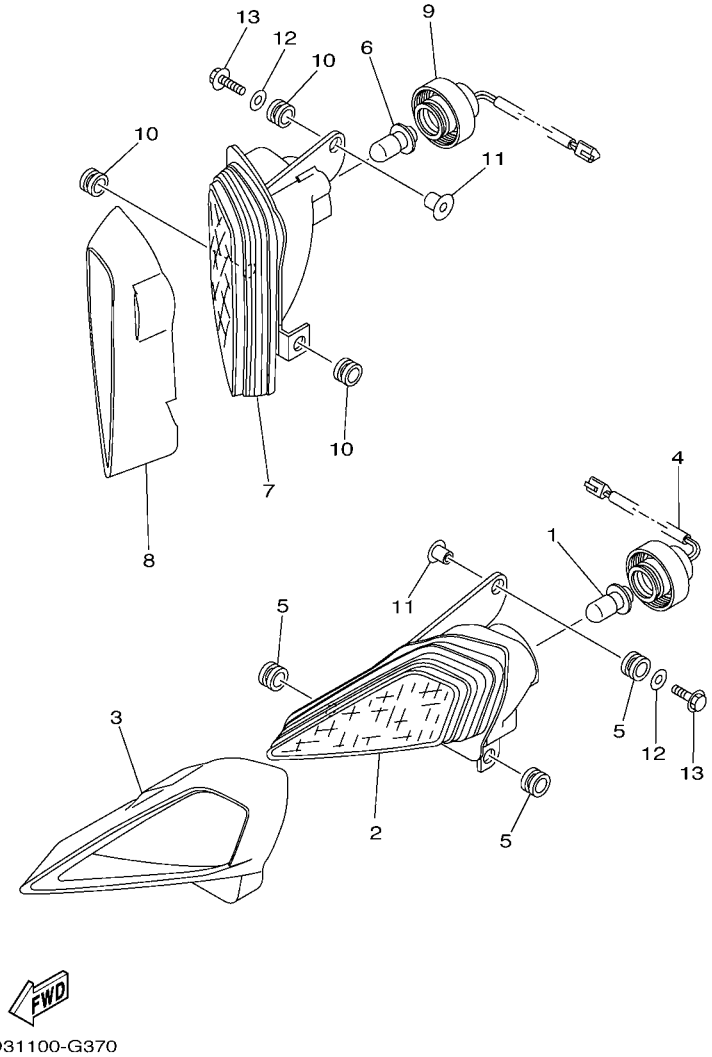

FIG. 37 HEADLIGHT

REF. NO.	PART NO.	DESCRIPTION	USA	CAN	EUR	OCE	JPN	REMARKS
1	4KB–84314–01	BULB (12V-30/30W)	1	1	1	1	1	
2	5TG–84110–03	HEADLIGHT UNIT ASSY	1	1	1	1	1	
3	5TG–84165–01	RIM, HEADLIGHT COVER 1	1	1	1	1	1	
4	5TG–84140–01	SOCKET CORD ASSY	1	1	1	1	1	
5	90480–14102	GROMMET	3	3	3	3	3	
6	4KB–84314–01	BULB (12V-30/30W)	1	1	1	1	1	
7	5TG–84310–03	HEADLIGHT UNIT ASSY	1	1	1	1	1	
8	5TG–84166–01	RIM, HEADLIGHT COVER 2	1	1	1	1	1	
9	5TG–84340–01	SOCKET CORD ASSY 1	1	1	1	1	1	
10	90480–14102	GROMMET	3	3	3	3	3	
11	90387–06136	COLLAR	2	2	2	2	2	
12	90201–06078	WASHER, PLATE	2	2	2	2	2	
13	95812–06025	BOLT, FLANGE	2	2	2	2	2	

FIG. 38 TAILLIGHT

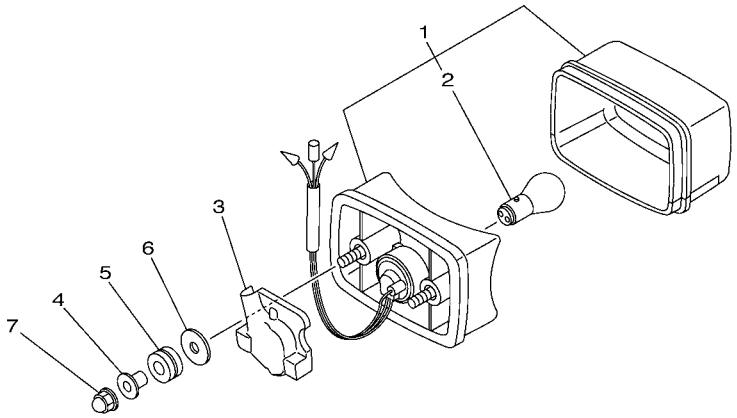

4D31100-G380

REF. NO.	PART NO.	DESCRIPTION	USA	CAN	EUR	OCE	JPN	REMARKS
1	3FA–84710–00	TAILLIGHT UNIT ASSY	1			1	1	
2	1A2–84714–41	.BULB (12V-21/5W)	1			1	1	
3	4D3–84516–00	COVER, TAILLIGHT	1			1	1	
4	90387–06158	COLLAR	2			2	2	
5	90480–14229	GROMMET	2			2	2	
6	90201–06036	WASHER, PLATE	2			2	2	
7	90176–06014	NUT, CROWN	2			2	2	

FIG. 39 TAILLIGHT 2

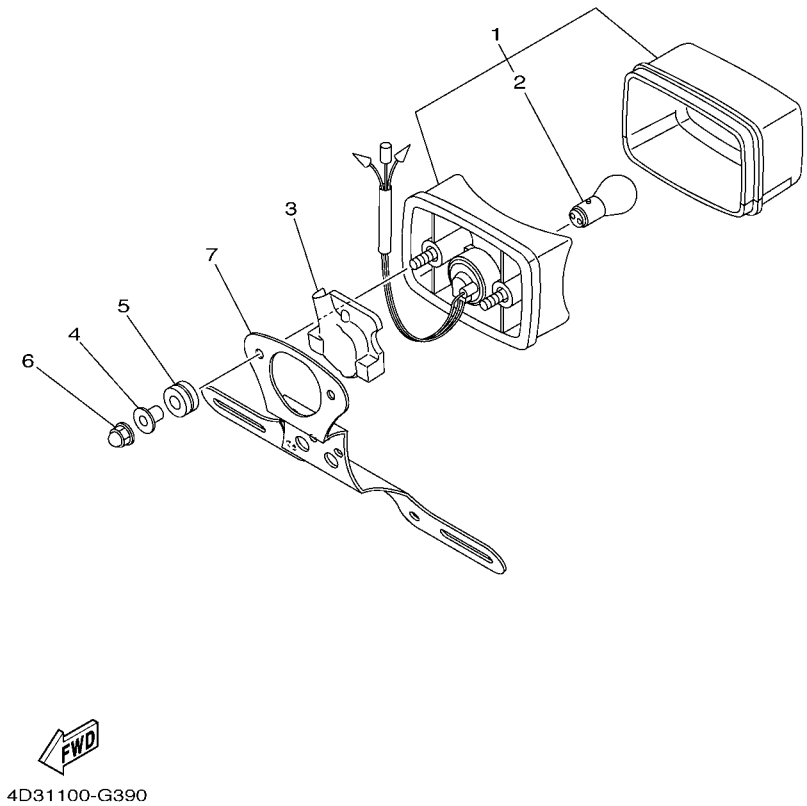

REF. NO.	PART NO.	DESCRIPTION	USA	CAN	EUR	OCE	JPN	REMARKS
1	3FA–84710–00	TAILLIGHT UNIT ASSY		1	1			
2	1A2–84714–41	.BULB (12V-21/5W)		1	1			
3	4D3–84516–00	COVER, TAILLIGHT		1	1			
4	90387–06158	COLLAR		2	2			
5	90480–14229	GROMMET		2	2			
6	90176–06014	NUT, CROWN		2	2			
7	4D3–84751–00	BRACKET, LICENSE		1	1			

FIG. 40 HANDLE SWITCH & LEVER

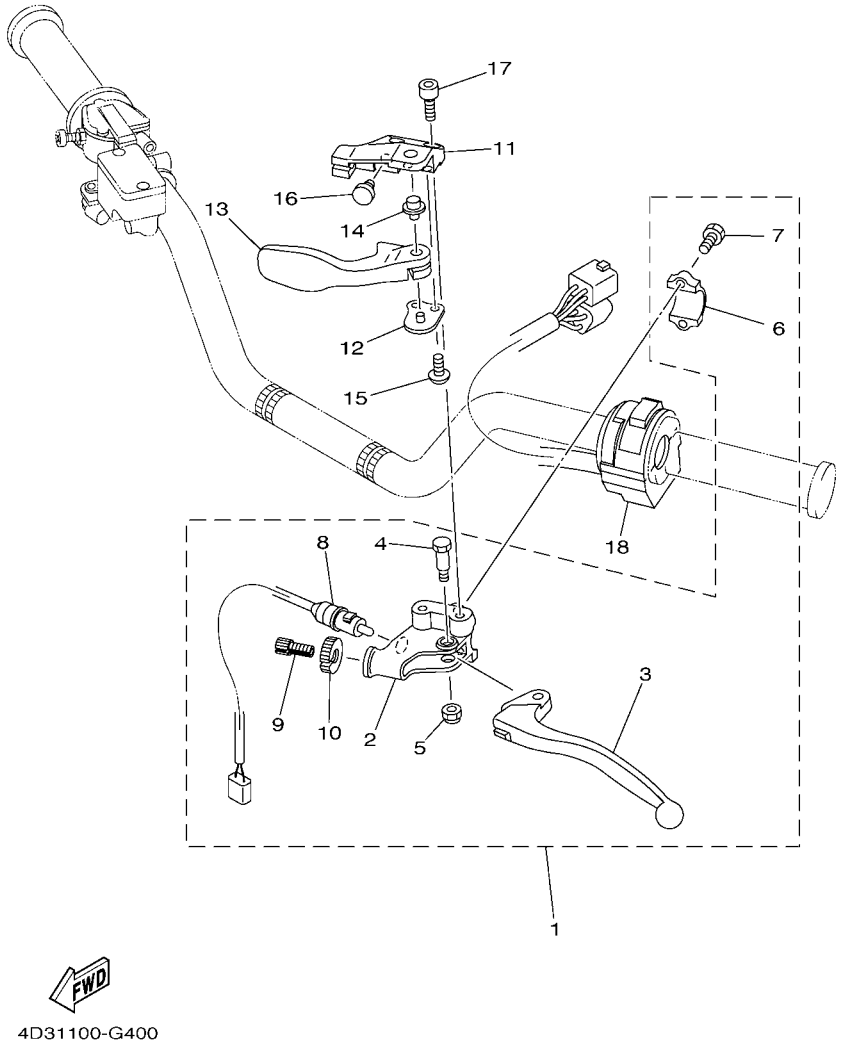

REF. NO.	PART NO.	DESCRIPTION	USA	CAN	EUR	OCE	JPN	REMARKS
1	4D3–82910–00	LEVER HOLDER ASSY (LEFT)	1	1	1	1	1	
2	5YT–82911–10	.HOLDER, LEVER 1	1	1	1	1	1	
3	3RN–83912–00	.LEVER 1	1	1	1	1	1	
4	90109–06798	.BOLT	1	1	1	1	1	
5	95602–06100	.NUT, U	1	1	1	1	1	
6	5TG–82913–00	.HOLDER, LEVER LOWER 1	1	1	1	1	1	
7	97002–05016	.BOLT	2	2	2	2	2	
8	5KM–82917–00	.SWITCH	1	1	1	1	1	
9	90123–08046	.BOLT	1	1	1	1	1	
10	90179–08148	.NUT	1	1	1	1	1	
11	5TG–25727–00	BRACKET, LEVER	1	1	1	1	1	
12	5D3–25689–00	PLATE, GUIDE	1	1	1	1	1	
13	5TG–25726–00	LEVER, BRAKE	1	1	1	1	1	
14	5TG–83923–00	COLLAR, LEVER 2	1	1	1	1	1	
15	92012–06014	BOLT, BUTTON HEAD	2	2	2	2	2	
16	90338–07007	PLUG	1	1	1	1	1	
17	92012–06014	BOLT, BUTTON HEAD	2	2	2	2	2	
18	4KB–83973–00	SWITCH, HANDLE 3	1	1	1	1	1	

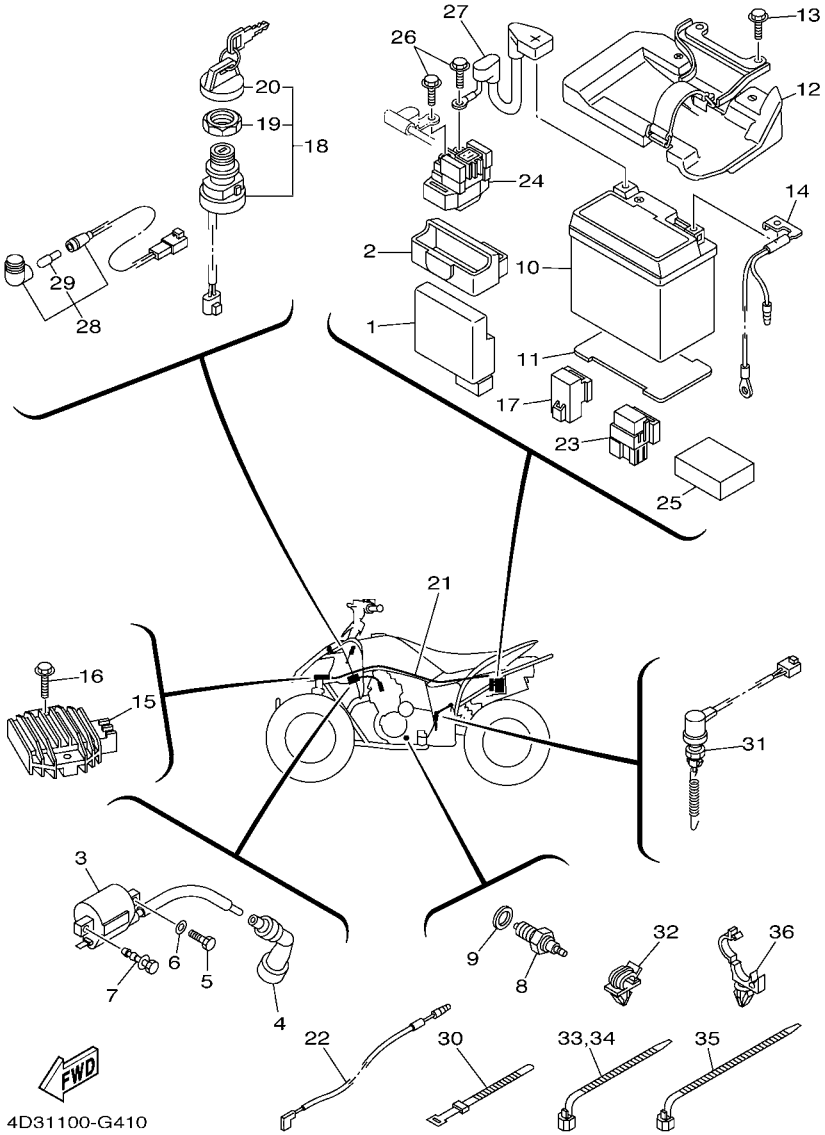

FIG. 41 ELECTRICAL 1

REF. NO.	PART NO.	DESCRIPTION	USA	CAN	EUR	OCE	JPN	REMARKS
1	4D3–85540–00	C.D.I. UNIT ASSY	1	1	1	1	1	
2	4D3–85546–00	BAND	1	1	1	1	1	
3	3NS–82310–10	IGNITION COIL ASSY	1	1	1	1	1	
4	3NS–82370–00	PLUG CAP ASSY	1	1	1	1	1	
5	97002–06020	BOLT	1	1	1	1	1	
6	92902–06600	WASHER, PLATE	1	1	1	1	1	
7	90109–06723	BOLT	1	1	1	1	1	
8	3GB–82540–01	NEUTRAL SWITCH ASSY	1	1	1	1	1	
9	90430–10148	GASKET	1	1	1	1	1	
10	1S4–82100–10	BATTERY ASSY (YT Z7S)	1	1	1	1		
	90793–26096	BATTERY ASSY (YUASA YTZ-7S)					1	
11	4D3–82122–00	SEAT, BATTERY	1	1	1	1	1	
12	4D3–82106–00	BATTERY PLATE COMP	1	1	1	1	1	
13	95812–06016	BOLT, FLANGE	2	2	2	2	2	
14	4D3–82116–00	WIRE, MINUS LEAD	1	1	1	1	1	
15	5GT–81960–00	RECTIFIER & REGULATOR ASSY	1	1	1	1	1	
16	95802–06020	BOLT, FLANGE	2	2	2	2	2	
17	1RL–81950–92	RELAY ASSY	1	1	1	1	1	
18	5LP–82510–00	MAIN SWITCH ASSY	1	1	1	1	1	
19	3HN–82569–00	.NUT, MAIN SWITCH	1	1	1	1	1	
20	3HN–82579–00	.CAP, KEY	1	1	1	1	1	
21	4D3–82590–00	WIRE HARNESS ASSY	1	1	1	1	1	
22	4D3–82541–00	WIRE, LEAD	1	1	1	1	1	
23	5DM–81950–00	RELAY ASSY	1	1	1	1	1	
24	4D3–81940–00	STARTER RELAY ASSY	1	1	1	1	1	
25	4D3–8252R–00	DAMPER	1	1	1	1	1	
26	95022–06008	BOLT, FLANGE	2	2	2	2	2	

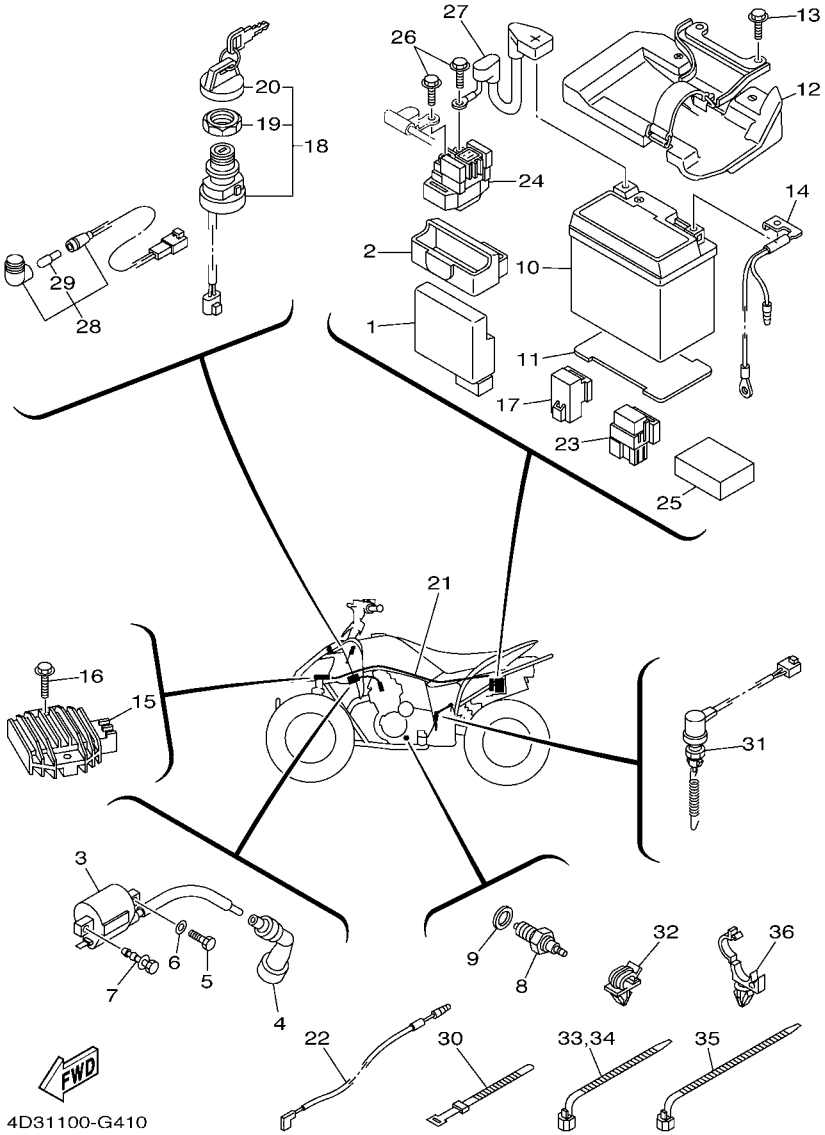

FIG. 41 ELECTRICAL 1

REF. NO.	PART NO.	DESCRIPTION	USA	CAN	EUR	OCE	JPN	REMARKS
27	4D3–82115–00	WIRE, PLUS LEAD	1	1	1	1	1	
28	4D3–83530–00	PILOT LIGHT ASSY	1	1	1	1	1	
29	5GH–83516–00	.BULB (14V-1.7W)	1	1	1	1	1	
30	437–83936–01	BAND, SWITCH CORD	3	3	3	3	3	
31	4D3–82530–00	STOP SWITCH ASSY	1	1	1	1	1	
32	90464–07011	CLAMP	1	1	1	1	1	
33	90464–13073	CLAMP	2	2	2	2	2	
34	90464–13073	CLAMP	2	2	2	2	2	
35	90464–15195	CLAMP	3	3	3	3	3	
36	90464–20010	CLAMP	1	1	1	1	1	

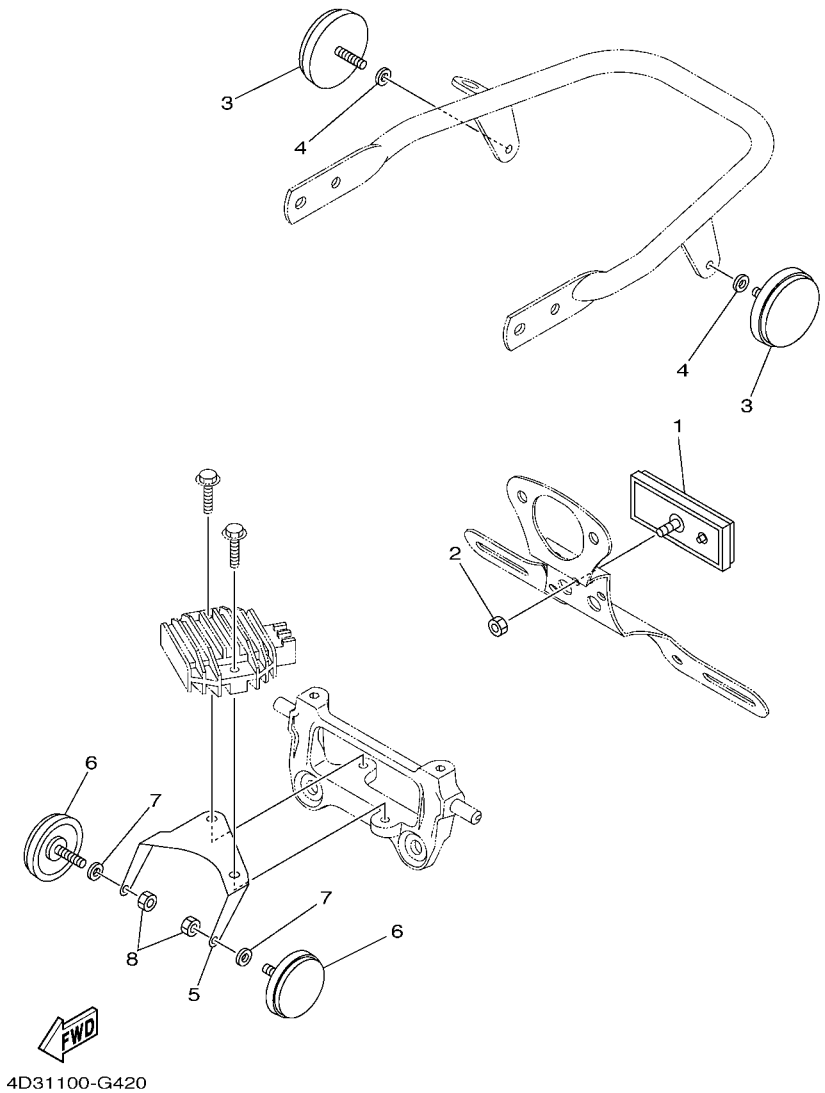

FIG. 42 ELECTRICAL 2

REF. NO.	PART NO.	DESCRIPTION	USA	CAN	EUR	OCE	JPN	REMARKS
1	3Y6–85130–02	REAR REFLECTOR ASSY		1	1			
2	95302–05600	NUT		1	1			
3	449–85131–02	REFLECTOR, REAR 1		2				
4	92902–05200	WASHER		2				
5	4D3–85112–00	BRACKET, REFLECTOR 1		1				
6	2EK–85111–00	REFLECTOR, FRONT 1		2				
7	92902–05200	WASHER		2				
8	95302–05600	NUT		2				

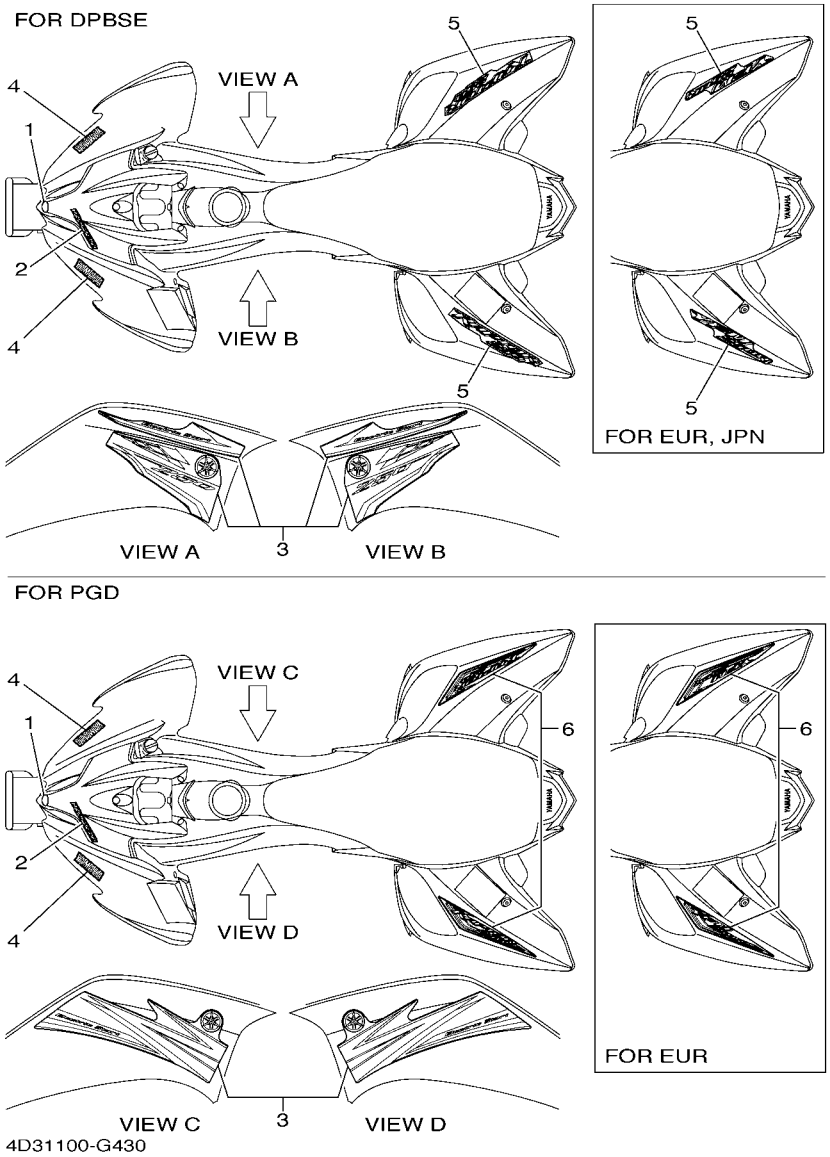

FIG. 43 GRAPHICS

REF. NO.	PART NO.	DESCRIPTION	USA	CAN	EUR	OCE	JPN	REMARKS
1	4KN–2836B–10	TUNING FORK MARK	1	1	1	1	1	
2	4D3–21565–00	EMBLEM, 2	1	1		1		UR FOR DPBSE
	4D3–21565–10	EMBLEM, 2	1	1		1		UR FOR PGD
3	4D3–21570–00	GRAPHIC SET, FRONT FENDER	1	1	1	1	1	UR FOR DPBSE
	4D3–21570–10	GRAPHIC SET, FRONT FENDER	1	1	1	1		UR FOR PGD
4	3GD–2153E–00	EMBLEM, YAMAHA	2	2	2	2	2	UR FOR DPBSE
	3GD–2153E–20	EMBLEM, YAMAHA	2	2	2	2		UR FOR PGD
5	4D3–21609–00	EMBLEM	2	2		2		FOR DPBSE
	4D3–21609–10	EMBLEM			2		2	FOR DPBSE
6	4D3–2165A–00	GRAPHIC SET,REAR FENDER	1	1		1		FOR PGD
	4D3–2165A–10	GRAPHIC SET,REAR FENDER			1			FOR PGD

FIG. 44 EMBLEM & LABEL 1

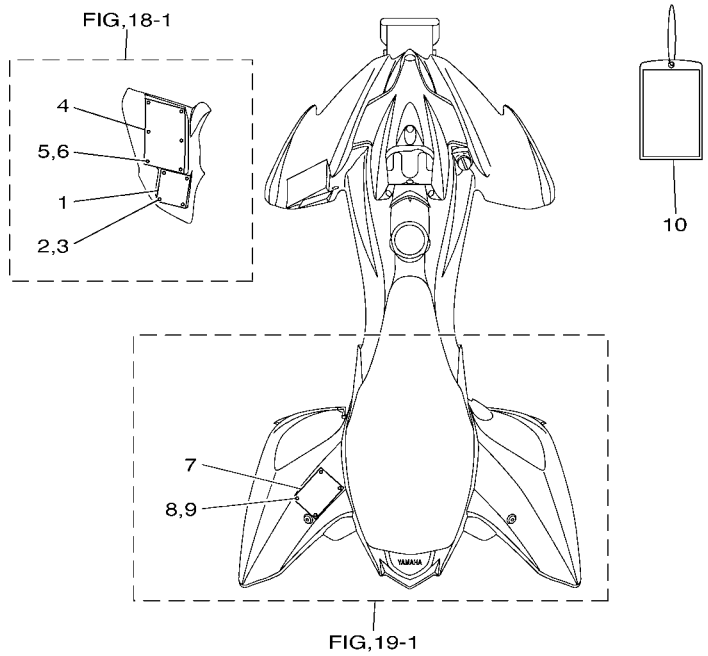

REF. NO.	PART NO.	DESCRIPTION	USA	CAN	EUR	OCE	JPN	REMARKS
1	5FE–21697–01	LABEL, CAUTION 2	1					ENGLISH
2	90267–32004	RIVET, BLIND	4					
3	90201–03008	WASHER, PLATE	4					
4	5FE–21568–01	LABEL, WARNING	1					ENGLISH
5	90267–32004	RIVET, BLIND	6					
6	90201–03008	WASHER, PLATE	6					
7	5LP–21696–00	LABEL, CAUTION	1					EINGLISH
8	90267–32004	RIVET, BLIND	4					
9	90201–03008	WASHER, PLATE	4					
10	5LP–2819R–00	TAG, WARNING	1					

FIG. 45 EMBLEM & LABEL 2

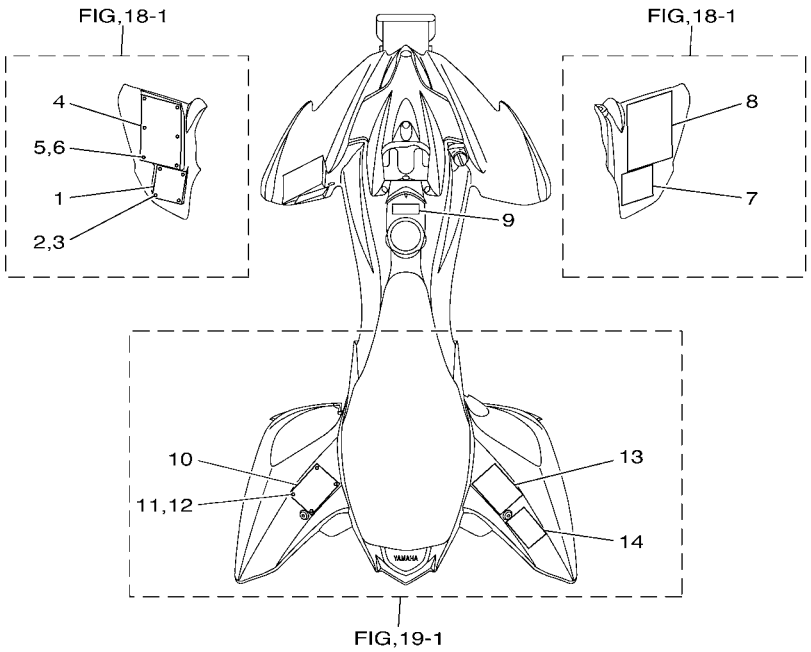

4D31100-G450

REF. NO.	PART NO.	DESCRIPTION	USA	CAN	EUR	OCE	JPN	REMARKS
1	5FE–21697–01	LABEL, CAUTION 2		1				ENGLISH
2	90267–32004	RIVET, BLIND		4				
3	90201–03008	WASHER, PLATE		4				
4	5FE–21568–01	LABEL, WARNING		1				ENGLISH
5	90267–32004	RIVET, BLIND		6				
6	90201–03008	WASHER, PLATE		6				
7	3JM–21697–10	LABEL, CAUTION 2		1				FRENCH
8	4WU–21568–10	LABEL, WARNING		1				FRENCH
9	4SH–2416E–00	LABEL, CAUTION CANADA		1				ENGLISH
10	5LP–21696–00	LABEL, CAUTION		1				EINGLISH
11	90267–32004	RIVET, BLIND		4				
12	90201–03008	WASHER, PLATE		4				
13	5LP–21696–B0	LABEL, CAUTION		1				FRENCH
14	4WU–2151H–10	LABEL 5		1				FRENCH

FIG. 46 EMBLEM & LABEL 3

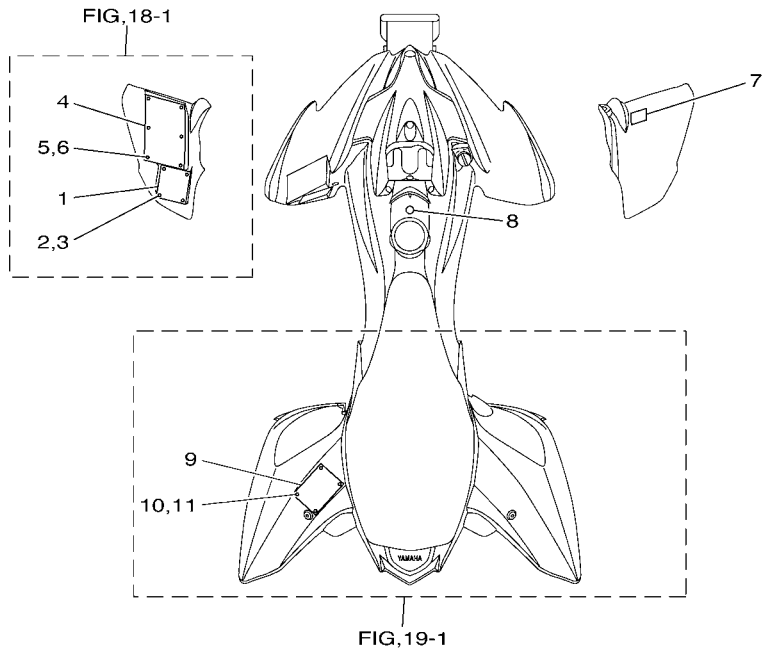

4D31100-G460

REF. NO.	PART NO.	DESCRIPTION	USA	CAN	EUR	OCE	JPN	REMARKS
1	5FK–21697–00	LABEL, CAUTION 2			1			
2	90267–32004	RIVET, BLIND			4			
3	90201–03008	WASHER, PLATE			4			
4	5FK–21568–00	LABEL, WARNING			1			
5	90267–32004	RIVET, BLIND			6			
6	90201–03008	WASHER, PLATE			6			
7	4GB–2155A–00	MARK,EC			1			
8	3ME–2415E–01	LABEL, CAUTION			1			
9	5LP–21696–M0	LABEL, CAUTION			1			
10	90267–32004	RIVET, BLIND			4			
11	90201–03008	WASHER, PLATE			4			

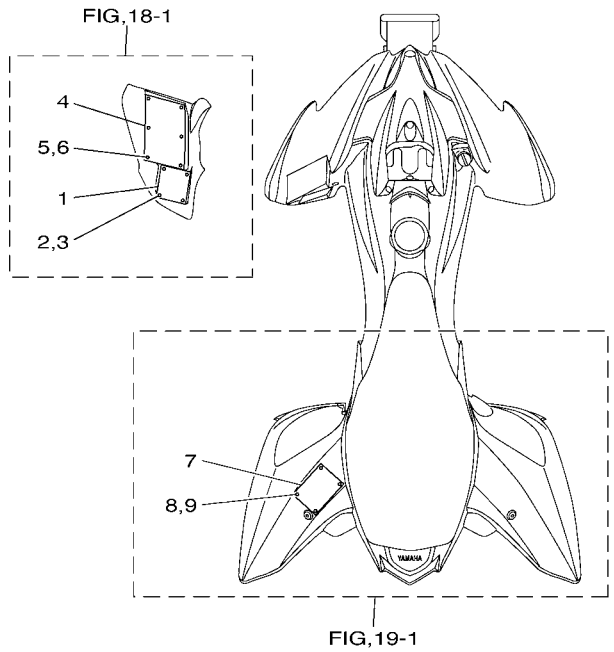

4D31100-G470

FIG. 47 EMBLEM & LABEL 4

REF. NO.	PART NO.	DESCRIPTION	USA	CAN	EUR	OCE	JPN	REMARKS
1	5FE–21697–01	LABEL, CAUTION 2				1		ENGLISH
2	90267–32004	RIVET, BLIND				4		
3	90201–03008	WASHER, PLATE				4		
4	5FE–21568–11	LABEL, WARNING				1		ENGLISH
5	90267–32004	RIVET, BLIND				6		
6	90201–03008	WASHER, PLATE				6		
7	5LP–21696–00	LABEL, CAUTION				1		EINGLISH
8	90267–32004	RIVET, BLIND				4		
9	90201–03008	WASHER, PLATE				4		

FIG. 48 EMBLEM & LABEL 5

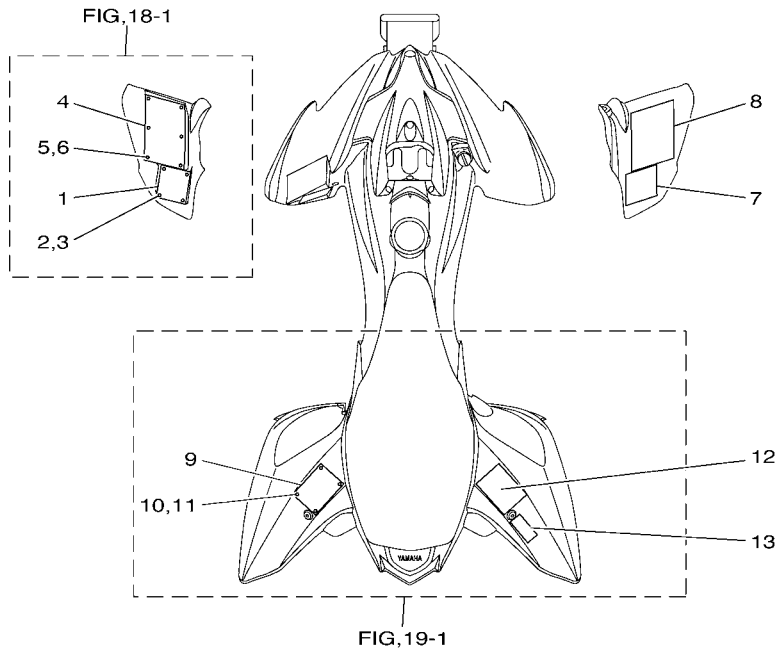

4D31100-G480

REF. NO.	PART NO.	DESCRIPTION	USA	CAN	EUR	OCE	JPN	REMARKS
1	5FE–21697–01	LABEL, CAUTION 2					1	ENGLISH
2	90267–32004	RIVET, BLIND					4	
3	90201–03008	WASHER, PLATE					4	
4	5FE–21568–11	LABEL, WARNING					1	ENGLISH
5	90267–32004	RIVET, BLIND					6	
6	90201–03008	WASHER, PLATE					6	
7	4SH–21697–00	LABEL, CAUTION 2					1	JAPANESE
8	4SH–21568–00	LABEL, WARNING					1	JAPANESE
9	5LP–21696–00	LABEL, CAUTION					1	EINGLISH
10	90267–32004	RIVET, BLIND					4	
11	90201–03008	WASHER, PLATE					4	
12	5LP–21696–10	LABEL, CAUTION					1	JAPANESE
13	4LB–2151H–02	LABEL 5					1	

NUMERICAL INDEX

PART NO.	GRID NO.
3C5–11102–00	B – 2
5XT–1111F–00	B – 2
4D3–1112F–00	B – 2
5H0–11133–11	B – 2
4KB–11145–00	B – 8
5XT–11165–00	B – 2
4D3–11166–00	B – 2
5XT–11181–00	B – 2
4D3–11186–00	B – 2
4D3–11190–00	B – 2
4D3–11196–00	B – 2
4D3–11311–00	B – 4
4D3–11351–00	B – 4
4D3–11400–00	B – 5
4D3–11412–00	B – 5
4D3–11422–00	B – 5
5XT–11454–00	B – 5
5XT–11478–00	B – 5
5XT–11496–00	B – 5
1S4–11531–00	B – 5
5XT–11533–00	B – 5
1S4–11536–00	B – 5
5BP–11549–00	B – 5
4XV–11603–00	B – 5
1S4–11631–10–A0	B – 5
4XV–11633–00	B – 5
1S4–11651–00	B – 5
1S4–11681–00	B – 5
5H0–12111–02	B – 7
11H–12113–00	B – 7
11H–12114–00	B – 7
4G0–12116–01	B – 7
4G0–12117–00	B – 7
4G0–12118–00	B – 7
5H0–12119–00	B – 7
5XT–12121–00	B – 7
5H0–12146–00	B – 7
36X–12151–00	B – 7
5H0–12156–00	B – 7
5XT–12159–00	B – 7
1S4–12171–00	B – 8
5XT–12176–00	B – 8
5XT–12210–00	B – 8
4FM–12213–00	B – 8
5BP–12231–00	B – 8
5XT–12241–00	B – 8
5XT–13161–00	B – 9
4D3–13300–00	B – 9

PART NO.	GRID NO.
4D3–13326–00	B – 9
4D3–13329–00	B – 9
22F–13411–01	B – 9
5TA–13440–00	B – 9
4D3–13447–00	B – 9
4D3–13464–00	B – 10
4D3–13465–00	B – 10
4KB–13470–00	B – 10
4D3–13586–00	B – 11
4D3–13596–00	B – 11
4D3–14105–00	B – 12
5YT–14107–20	B – 12
4D3–14112–00	B – 12
3F9–14118–00	B – 13
4D3–14123–00	B – 13
137–14133–00	B – 13
4KM–14142–25	B – 12
1AE–14147–00	B – 12
3H1–14147–00	B – 12
5LP–14147–00	B – 13
5DM–1414M–40	B – 12
5V7–14153–00	B – 13
3GD–14155–00	B – 13
1S3–14161–00	B – 13
127–14186–00	B – 12
12R–14191–00	B – 12
24W–14193–00	B – 11
4D3–14193–00	B – 13
4D3–14196–00	B – 13
1UM–14197–00	B – 14
4KM–14216–00	B – 12
3G2–14231–11	B – 12
1HX–14231–34	B – 13
620–1423E–53	B – 12
4D3–14261–00	B – 12
5AP–14280–00	B – 13
4WV–14293–00	B – 13
4D3–14411–00	B – 11
4D3–14412–00	B – 11
31A–14419–00	B – 11
5GH–14436–00	B – 11
2XJ–14451–00	B – 11
4D3–14452–00	B – 11
4D3–14453–00	B – 11
59V–14457–00	B – 11
2XJ–14458–00	B – 11
4D3–14459–00	B – 11
2XJ–14477–00	B – 11

PART NO.	GRID NO.
5DM–14561–00	B – 12
1FN–14565–00	B – 13
4D3–14611–00	B – 15
3GD–14613–00	B – 15
4D3–14628–00	B – 15
4D3–14710–00	B – 15
3YF–14714–00	B – 15
4D3–14718–00	B – 15
5XT–14815–00	B – 2
4D3–14841–00	B – 12
4D3–14901–00	B – 12
4D3–14901–10	B – 12
4D3–1490A–00	B – 12
4D3–1490H–00	B – 13
4D3–1490J–00	B – 12
4D3–1490J–10	B – 12
5GH–14918–10	B – 12
4D3–14933–00	B – 12
3HT–14934–00	B – 13
4D3–14937–00	B – 12
5CY–14951–00	B – 13
5DM–14952–00	B – 13
4D3–14958–00	B – 12
3H1–14962–00	B – 12
5FU–14962–00	B – 13
5DM–14985–00	B – 13
5JJ–14987–00	B – 14
4D3–14988–00	B – 13
5XT–15100–07	C – 2
5XT–15113–00	C – 3
4D3–15327–00	C – 2
4D3–15328–00	C – 3
4D3–15362–00	C – 3
4D3–15411–00	C – 3
4D3–15415–00	C – 3
4D3–15418–00	C – 3
4D3–15421–00	C – 3
4D3–15441–00	C – 2
4D3–15451–00	C – 3
4D3–15461–00	C – 3
4D3–15493–00	C – 3
5XT–15512–00	C – 5
5XT–15515–00	C – 5
5XT–15517–00	C – 5
1VJ–15521–00	C – 5
36Y–15521–01	C – 5
5BP–15590–00	C – 5
4D3–16111–00	C – 6

PART NO.	GRID NO.
4D3–16150–00	C – 6
30X–16154–00	C – 6
3XJ–16321–00	C – 6
5DH–16321–00	C – 6
3XJ–16324–01	C – 6
4GY–16351–00	C – 6
5XT–16356–00	C – 6
4GY–16357–00	C – 7
1W1–16358–01	C – 6
4D3–16371–00	C – 6
4D3–16381–00	C – 6
4D3–17121–00	C – 8
4D3–17131–00	C – 8
4D3–17141–00	C – 8
4D3–17151–00	C – 8
4D3–17211–00	C – 8
4D3–17221–00	C – 8
4D3–17231–00	C – 8
4D3–17241–00	C – 8
4D3–17251–00	C – 8
4D3–17402–00	C – 8
4D3–17411–00	C – 8
4D3–18101–00	C – 9
4D3–18110–00	C – 9
5YT–18113–00	C – 9
4TP–18140–00	C – 9
4D3–18511–00	C – 9
4D3–18512–00	C – 9
4D3–18513–00	C – 9
4GY–18531–00	C – 9
1S4–18540–00	C – 9
4D3–21110–00–P0	C – 10
4D3–21110–00–P1	C – 10
4D3–21315–00	C – 10
4D3–21316–00	C – 10
4D3–2137G–00	C – 10
4D3–21471–00	C – 10
4D3–21513–00	C – 12
4D3–21514–00	C – 12
4LB–2151H–02	F – 4
4WU–2151H–10	E – 15
4D3–21523–00	C – 12
3GD–2153E–00	E – 13
3GD–2153E–20	E – 13
4D3–21541–00	D – 6
5TG–21541–00	D – 6
4GB–2155A–00	F – 2
4D3–21565–00	E – 13

PART NO.	GRID NO.
4D3–21565–10	E – 13
4SH–21568–00	F – 4
5FK–21568–00	F – 2
5FE–21568–01	E – 14
	E – 15
4WU–21568–10	E – 15
5FE–21568–11	F – 3
	F – 4
4D3–21570–00	E – 13
4D3–21570–10	E – 13
4D3–21609–00	E – 13
4D3–21609–10	E – 13
4D3–21613–00	C – 14
4D3–21614–00	C – 14
4D3–21621–00	C – 13
4D3–2163A–00	C – 14
4D3–2164F–00	C – 13
4D3–2164G–00	C – 13
4D3–2164H–00	C – 13
5YT–2164J–10	C – 13
4D3–2165A–00	E – 13
4D3–2165A–10	E – 13
5LP–21691–00	C – 13
5LP–21696–00	E – 14
	E – 15
	F – 3
	F – 4
5LP–21696–10	F – 4
5LP–21696–B0	E – 15
5LP–21696–M0	F – 2
4SH–21697–00	F – 4
5FK–21697–00	F – 2
5FE–21697–01	E – 14
	E – 15
	F – 3
	F – 4
3JM–21697–10	E – 15
8ET–21747–00	C – 12
4D3–2177C–00	B – 11
4D3–22110–00–P0	C – 15
2JN–22141–00	C – 15
109–22141–01	D – 3
4D3–22151–00	C – 15
4D3–22178–00	C – 10
4D3–2217H–00	C – 15
4D3–22184–00	C – 15
30X–2219X–00	C – 15
4D3–2219X–00	C – 15

PART NO.	GRID NO.
4D3–22210–00–35	D – 2
4D3–22210–00–36	D – 2
4D3–22210–10–35	D – 2
4D3–22210–10–36	D – 2
4D3–22210–20–35	D – 2
4D3–22210–20–36	D – 2
4D3–22210–30–36	D – 2
3YK–22259–00	D – 2
4AA–22259–40	D – 2
4AA–22259–70	D – 2
4AA–22259–80	D – 2
4D3–22314–00	C – 15
4D3–22347–00	C – 15
4D3–22348–00	C – 15
4D3–23350–00	D – 4
4D3–23350–10	D – 4
4D3–23391–00	C – 12
4D3–23391–10	C – 12
3GD–23501–10	D – 4
3GD–23502–10	D – 4
5YT–23517–00	D – 3
4D3–23540–00–P0	D – 3
4D3–23550–00–P0	D – 3
4D3–23570–00–P0	D – 3
4D3–23580–00–P0	D – 3
1UY–23812–00	D – 5
4D3–23813–00	D – 5
8K1–23814–00	D – 5
4D3–23831–00	D – 5
1UY–23841–01	D – 5
1UY–23845–01	D – 5
4D3–23868–00	D – 5
1UY–23894–01	D – 5
4D3–24110–00	D – 6
4D3–24110–10	D – 6
4D3–2414H–00	D – 6
3ME–2415E–01	F – 2
4SH–2416E–00	E – 15
4D3–24181–00	D – 6
4D3–24182–00	D – 6
4D3–24183–00	D – 6
4D3–24184–00	D – 6
4D3–24500–00	D – 6
1P6–24512–00	D – 6
5KM–24610–00	D – 6
4D3–2470F–00	D – 7
4D3–2470F–10	D – 7
4D3–24710–00	D – 7

PART NO.	GRID NO.
4D3–24710–10	D – 7
509–24724–00	D – 7
3C3–24741–00	C – 10
3GD–25111–20	D – 8
1UY–25117–00	D – 8
1S3–25127–00	D – 8
4D3–2514A–00	D – 10
5LP–25180–20	D – 8
4D3–25311–00	C – 15
4D3–25317–00	C – 15
4D3–25377–00	C – 15
4D3–25381–00	D – 11
1S3–25383–20	D – 11
5YT–25386–00	D – 11
4D3–25390–00	D – 11
5TG–25438–10	D – 11
5D3–25689–00	E – 9
5YT–25712–00	D – 12
4D3–25721–00	C – 15
5TG–25726–00	E – 9
5TG–25727–00	E – 9
5TG–2580E–20	E – 2
4D3–2580T–00	D – 9
4D3–2580U–00	D – 9
5YT–2580W–10	D – 12
3GD–2582T–10	D – 9
4D3–2582W–00	D – 12
5MV–25833–00	D – 14
4D3–2583T–00	D – 14
5YU–25852–00	D – 14
3XP–25852–50	E – 2
2VN–25854–00	E – 2
4TT–25854–00	D – 14
2VN–25855–00	E – 2
3B4–2585B–00	D – 14
2GU–25866–00	D – 14
5MV–25867–00	D – 14
4D3–25871–00	D – 14
4D3–25872–00	D – 14
4D3–25873–00	D – 14
4D3–25874–00	E – 2
4D3–25886–00	D – 14
4D3–25888–00	E – 2
5TG–25894–00	E – 2
4D3–25895–00	E – 2
3B4–2589F–00	D – 14
4NK–2589H–00	D – 14
3JD–25917–00	D – 9
1UY–25917–51	D – 12
5DH–25919–00	D – 9
1UY–25924–51	D – 12
3JD–25926–00	D – 9
8CR–25926–00	D – 9
1UY–25926–51	D – 9
5DH–25933–00	D – 9
1UY–25933–51	D – 12
1UY–25937–51	D – 9
1UY–25938–51	D – 9
3JD–25961–00	D – 9
1UY–25972–51	D – 12
5YT–25977–50	D – 12
4D3–26111–00	D – 13
4D3–26124–00	D – 13
1NV–26129–00	D – 13
5LP–26241–00	D – 13
4KB–26250–20	D – 13
4KB–26256–00	D – 13
4KB–26258–00	D – 13
1UY–26259–00	D – 14
1NV–2625G–01	D – 13
4KB–2628F–20	D – 13
4KB–2628G–00	D – 13
1NV–26304–00	D – 13
4D3–26311–00	D – 13
4KB–2632G–00	D – 13
4D3–26335–00	D – 13
4D3–26341–00	D – 13
31A–26372–00	D – 13
1NV–26398–00	D – 13
157–27114–00	D – 7
4D3–27211–00	D – 15
4SS–27218–00	E – 2
2YK–27222–00	E – 2
3KW–27234–00	E – 2
4D3–27411–00	D – 15
4D3–27421–00	D – 15
3MA–27491–00	C – 12
4D3–27491–00	E – 2
4D3–28100–00	C – 10
1NV–2811A–01	C – 11
5LP–2819R–00	E – 14
4KN–2836B–10	E – 13
4D3–2845N–00–R4	E – 3
4D3–2845R–00–R4	E – 3
4D3–2845R–10–R4	E – 3
4D3–81410–00	E – 4
5XT–81450–01	E – 4
3C5–81801–00	E – 5
5HP–81828–00	E – 5
5TJ–81828–01	E – 5
5HP–8182M–00	E – 5
4D3–8183G–00	E – 5
3C5–81890–00	E – 5
4D3–81940–00	E – 10
5DM–81950–00	E – 10
1RL–81950–92	E – 10
5GT–81960–00	E – 10
1S4–82100–10	E – 10
4D3–82106–00	E – 10
4D3–82115–00	E – 11
4D3–82116–00	E – 10
4D3–82122–00	E – 10
3NS–82310–10	E – 10
3NS–82370–00	E – 10
4D3–82509–00	B – 13
5LP–82510–00	E – 10
4D3–8252R–00	E – 10
4D3–82530–00	E – 11
3GB–82540–01	E – 10
4D3–82541–00	E – 10
3HN–82569–00	E – 10
3HN–82579–00	E – 10
4D3–82590–00	E – 10
4D3–82910–00	E – 9
5YT–82911–10	E – 9
4V4–82913–00	D – 13
5TG–82913–00	E – 9
5KM–82917–00	E – 9
5GH–83516–00	E – 11
4D3–83530–00	E – 11
5FU–83790–00	B – 13
3RN–83912–00	E – 9
4D3–83922–00	D – 14
5TG–83923–00	E – 9
437–83936–01	E – 11
4KB–83973–00	E – 9
5D3–83980–00	D – 14
5TG–84110–03	E – 6
5TG–84140–01	E – 6
5TG–84165–01	E – 6
5TG–84166–01	E – 6
5TG–84310–03	E – 6
4KB–84314–01	E – 6
5TG–84340–01	E – 6
4D3–84516–00	E – 7
	E – 8
3FA–84710–00	E – 7
	E – 8
1A2–84714–41	E – 7
	E – 8
4D3–84751–00	E – 8
2EK–85111–00	E – 12
4D3–85112–00	E – 12
3Y6–85130–02	E – 12
449–85131–02	E – 12
4D3–85540–00	E – 10
4D3–85546–00	E – 10
5D3–W0041–00	D – 14
5TG–W0042–50	E – 2
4D3–W0045–00	D – 9
4D3–W0045–10	D – 10
4D3–W0046–50	D – 12
3B4–W0047–00	D – 9
5LP–W0047–50	D – 12
1UY–W0048–50	D – 9
	D – 12
3B4–W0057–00	D – 9
5LP–W0057–50	D – 12
4D3–W2151–00	C – 12
4D3–W2151–10	C – 12
4D3–W215B–00	C – 12
4D3–W215B–10	C – 12
4D3–W215C–00	C – 12
4D3–W215C–10	C – 12
4D3–W215D–00	C – 12
4D3–W215D–10	C – 12
4D3–W2161–00	C – 13
4D3–W2161–10	C – 13
4D3–W216B–00	C – 13
4D3–W216B–10	C – 13
4D3–W216C–00	C – 13
4D3–W216C–10	C – 13
90101–06043	B – 8
90101–10016	B – 8
90105–06078	B – 2
90105–06125	E – 5
90105–06126	B – 2
90105–08160	B – 2
90105–08161	D – 10
90105–08183	D – 12
90105–10131	D – 4
90105–10214	C – 10
90105–10219	C – 10
90105–10220	C – 10
90105–10221	C – 10
90105–10241	D – 3
90105–10430	B – 5
90105–12051	D – 2
90109–06169	B – 9
90109–06172	C – 10
	C – 12
	C – 13
	C – 15
90109–06189	C – 9
90109–06214	C – 12
90109–06236	C – 15
90109–06240	E – 2
90109–06241	C – 13
90109–06723	E – 10
90109–06798	E – 9
90109–08082	D – 9
90109–08105	C – 6
90109–081F0	D – 12
90109–10010	D – 11
90110–05032	C – 3
90110–06161	E – 4
90110–06169	E – 4
90110–06200	C – 14
90110–08053	C – 5
90111–06086	C – 12
90113–06055	D – 12
90114–10006	D – 8
90114–10013	D – 11
90116–08023	B – 3
90122–06035	B – 11
90123–08046	E – 9
90149–06093	B – 9
90149–06108	D – 6
90153–06002	B – 2
90154–05013	C – 13
90154–06014	D – 10
90154–06061	C – 13
90159–06029	C – 6
90170–06128	B – 7
90170–10010	D – 5
90170–12370	B – 6
90170–16003	C – 6
90170–16326	C – 6
90170–33010	D – 12
90171–10001	D – 4
90171–10001	D – 5
90171–14002	D – 8
90171–14004	D – 11
90176–06014	E – 7
	E – 8
90179–08148	E – 9
90179–18552	C – 8
90185–10012	D – 3
90185–10019	D – 5
90185–14009	C – 15
90201–03008	E – 14
	E – 15
	F – 2
	F – 3
	F – 4
90201–05017	B – 15
90201–06036	E – 7
90201–06078	E – 6
90201–08048	C – 13
90201–08054	C – 10
90201–08066	E – 2
90201–08609	B – 2
90201–10035	D – 4
90201–10036	D – 5
90201–10118	D – 14
	E – 2
90201–102R1	B – 5
90201–10591	B – 8
90201–14020	C – 15
90201–14021	D – 11
90201–14586	D – 8
90201–15018	D – 15
90201–17255	C – 8
90201–25291	C – 5
90206–15021	D – 15
90208–34001	D – 12
90209–06014	B – 11
90209–10229	D – 5
90209–18208	C – 8
90209–22191	C – 8
90214–16063	C – 6
90214–22004	C – 8
90214–22005	C – 8
90215–12272	B – 6
90215–16289	C – 6
90215–16293	C – 6
90215–23265	C – 8
90240–07105	B – 5

PART NO.	GRID NO.
90240–08005	E – 2
90267–32004	E – 14
	E – 15
	F – 2
	F – 3
	F – 4
90269–07010	C – 12
90280–05048	B – 5
90282–05013	B – 6
90282–05077	C – 6
90338–07007	E – 9
90338–16148	C – 10
90340–12059	C – 2
90340–14014	C – 3
90340–32005	C – 3
90381–15040	C – 10
90381–15088	D – 3
90387–06136	E – 6
90387–06158	E – 7
	E – 8
90387–062E0	C – 13
90387–066J1	D – 6
90387–090R0	D – 5
90387–100Y6	D – 3
90387–101R3	D – 3
90387–150R1	D – 8
90387–22017	C – 8
90401–08009	B – 9
90401–10015	D – 14
	E – 2
90401–10061	B – 9
90430–06014	B – 2
	C – 2
	C – 3
90430–06156	B – 9
90430–08119	B – 9
	C – 6
90430–10148	E – 10
90430–10171	B – 9
90430–12213	C – 2
90445–08376	D – 6
90445–11049	D – 6
90445–11050	D – 6
90445–16007	D – 6
90450–47002	B – 11
90450–58003	B – 11
90461–06087	B – 13
90461–08001	C – 2

PART NO.	GRID NO.
90462–08045	C – 2
90462–10215	C – 2
90464–07011	E – 11
90464–13073	E – 11
90464–15195	D – 6
	E – 11
90464–20010	E – 11
90465–16011	C – 3
90467–09026	B – 13
90467–09037	D – 6
90467–100A2	D – 6
90467–11044	E – 2
90467–12053	B – 2
90467–220A1	B – 11
90468–12069	B – 5
90480–14102	E – 6
90480–14229	E – 7
	E – 8
90480–15235	B – 10
	D – 5
90480–18004	D – 6
90480–18290	D – 6
90501–07629	B – 5
90501–22721	B – 5
90501–231E9	C – 6
90506–20026	D – 15
90508–203B3	C – 6
90508–26020	C – 9
90793–26096	E – 10
91312–06016	B – 2
	B – 10
	C – 3
91312–06020	B – 9
	B – 11
91312–06025	B – 8
91312–06065	B – 4
91312–06070	B – 9
91312–08045	B – 2
91312–08060	C – 15
91401–16012	E – 2
91401–20020	D – 4
	D – 5
91401–30025	D – 8
91401–30030	D – 11
91A20–07010	B – 11
92012–06014	E – 9
92902–05200	E – 12
92902–05600	D – 13

PART NO.	GRID NO.
92902–06200	C – 6
92902–06600	E – 10
93102–12224	C – 6
93102–14209	C – 9
93102–22216	D – 8
93102–25226	C – 8
93104–09025	D – 13
93105–26026	D – 8
93106–46001	C – 15
93108–35004	C – 15
93112–31011	D – 5
93210–07135	B – 9
93210–09165	B – 7
93210–10197	B – 10
93210–11453	B – 8
93210–12152	B – 10
93210–14369	C – 3
93210–15414	C – 10
93210–19123	C – 3
93210–25711	E – 5
93210–32172	C – 3
93210–35537	B – 11
93210–54001	B – 2
93210–54175	B – 9
93210–74M68	C – 4
93211–05471	B – 2
93306–00320	C – 8
93306–00446	D – 8
93306–00518	B – 8
93306–00710	C – 15
93306–20204	B – 8
93306–20231	D – 8
93306–20332	C – 8
93306–20427	C – 8
93306–20532	C – 8
93306–30214	B – 5
93306–37804	B – 5
93310–225N0	C – 5
93310–63239	B – 5
93317–11287	C – 6
93317–22237	C – 15
93410–22039	C – 8
93410–67085	C – 15
93430–12008	D – 15
93440–10085	B – 2
93440–25084	C – 8
93511–32017	C – 7
93602–13177	B – 5

PART NO.	GRID NO.
93604–10011	B – 8
93605–10090	B – 5
93608–43228	C – 9
93612–16254	B – 10
93700–06004	C – 10
	D – 3
9383R–14236	C – 8
93900–00022	D – 8
	D – 11
94107–10024	D – 8
94110–09024	D – 11
94581–87092	D – 11
94582–19104	B – 8
94681–87011	D – 11
94701–00345	B – 2
94703–00345	B – 2
95022–06008	E – 10
95022–06010	C – 2
95022–06016	C – 4
95022–06020	B – 2
95022–06025	C – 3
95022–06030	C – 3
95022–06040	C – 3
95022–06045	C – 2
	C – 3
95022–06050	C – 3
95022–06055	C – 2
95022–06060	C – 2
95022–06070	C – 2
95022–08025	E – 2
95024–08025	B – 15
95302–05600	E – 12
95302–06600	C – 6
95302–10700	D – 5
95602–05100	B – 11
95602–06100	E – 9
95602–06200	C – 12
	C – 13
95602–08200	C – 14
95602–10200	C – 2
	C – 10
	D – 11
95604–06100	D – 14
95607–05100	D – 13
95612–12100	D – 2
95702–08500	B – 15
95702–10500	D – 8
	D – 11

PART NO.	GRID NO.
95802–06016	D – 14
95802–06020	E – 10
95802–06025	D – 6
95812–06016	C – 2
	E – 10
95812–06020	C – 9
95812–06025	E – 6
95812–08012	E – 3
95812–08014	C – 10
	E – 3
95812–08016	B – 15
95812–10020	D – 15
95812–10170	C – 2
95822–06025	D – 14
95822–08012	C – 10
95822–08016	C – 13
95822–08025	C – 13
95822–08030	D – 5
97002–05016	E – 9
97002–06020	E – 10
97022–08055	D – 5
97607–04114	B – 13
98502–05020	D – 13
98507–04006	B – 12
98507–04008	B – 13
98507–04010	B – 12
98507–05010	B – 13
98902–06008	B – 15
99009–11400	B – 9
99009–20500	C – 6
99530–10114	C – 2
	C – 3
99530–14016	B – 2
	C – 2

PART NO.	GRID NO.